MARCO ISLAND PLANNING BOARD RESOLUTION NO. 03-74

RELATING TO PETITION NUMBER BD-03-04 FOR AN EXTENSION OF A BOAT DOCK ON PROPERTY HEREINAFTER DESCRIBED IN CITY OF MARCO ISLAND, FLORIDA.

WHEREAS, the Legislature of the State of Florida established the Charter of the City of Marco Island in Chapter 97-367, Laws of Florida ("City Charter"); and

WHEREAS, the City Charter provides that there shall be a planning commission advisory to the City Council; and

WHEREAS, the City Council adopted Ordinance 98-1, establishing and creating the Marco Island Planning Board; and

WHEREAS, pursuant to Ordinance No. 98-1, the Marco Island Planning Board is responsible for reviewing and finally approving private boat dock extensions; and

WHEREAS, Petition BD-03-04 is a request for a private boat dock extension as defined in Ordinance 98-1; and

WHEREAS, the City of Marco Island has adopted Ordinance 00-04 which regulates the requirements for boat docking facilities on Marco Island; and

WHEREAS, the Marco Island Planning Board, being the duly constituted Planning Board for the area hereby affected, has held a public hearing after proper notice as provided in said Regulations was made, and has considered the advisability of a 10-foot extension of a boat dock from the permitted 20 feet to allow for a 30-foot boat dock facility (as shown Exhibit "A") in a RSF-3 zone for the property hereinafter described, and has found as a matter of fact that satisfactory provision and arrangement have been made concerning all applicable matters required by said regulations and in accordance with Ordinance 00-04; and

WHEREAS, all interested parties have been given the opportunity to be heard by this Board in public meeting assembled, and the Board having considered all matters presented;

NOW THEREFORE, BE IT RESOLVED BY THE CITY OF MARCO ISLAND PLANNING BOARD of the City of Marco Island, Florida that:

The petition filed by Marco Dock & Lift, as agent for John and Susan Wold, property owners, with respect to the property hereinafter described as:

Marco Beach Unit 13, Block 408, Lot 7, Collier County, and the City of Marco Island, Florida

Be and the same is hereby approved for a 10-foot extension of a boat dock from the permitted 20 feet to allow for a 30-foot boat dock facility (as shown Exhibit "A") in the RSF-3 zoning district where in said property is located, subject to the following conditions:

1. All docks, or mooring pilings, whichever protrudes the greater into the water, regardless of length shall have reflectors and house numbers four (4) inches minimum size installed at the outermost end on both sides.
2. Permits or letters of exemption from the U.S. Army Corps of Engineers and the Florida Department of Environmental Protection shall be presented prior to the issuance of a building permit.
3. If applicable, any exotic vegetation as defined in Section 3.9.6.4.1 of the Land Development Code shall be removed from the site and the property shall be maintained exotic free in perpetuity.
4. Any outside lighting on the boat docking facility will comply with Ordinance 99-7.
5. The site plan attached to this resolution, also referred to as Exhibit "A", shall be binding upon the property upon approval of the resolution. Any deviation from the approved site plan shall require further consideration by the Planning Board after a properly noticed public hearing.
6. Prior to the issuance of a building permit for the approved boat dock facility, the property owner shall provide the City of Marco Island with a copy of the recorded resolution of approval.

BE IT FURTHER RESOLVED that this Resolution relating to Petition Number BD-03-04 be recorded in the minutes of this Board and filed with the City Clerk's Office.

This resolution adopted after motion, second and majority vote.

Done this 11th day of April 2003.

MARCO ISLAND PLANNING BOARD
MARCO ISLAND, FLORIDA

By: _____
Everett Van Hoesen, Chairman

Approved as to Form and legality:

_____
Gregory L. Urbancic
City Attorney

Exhibit A

DIMENSIONS ARE
APPROXIMATE

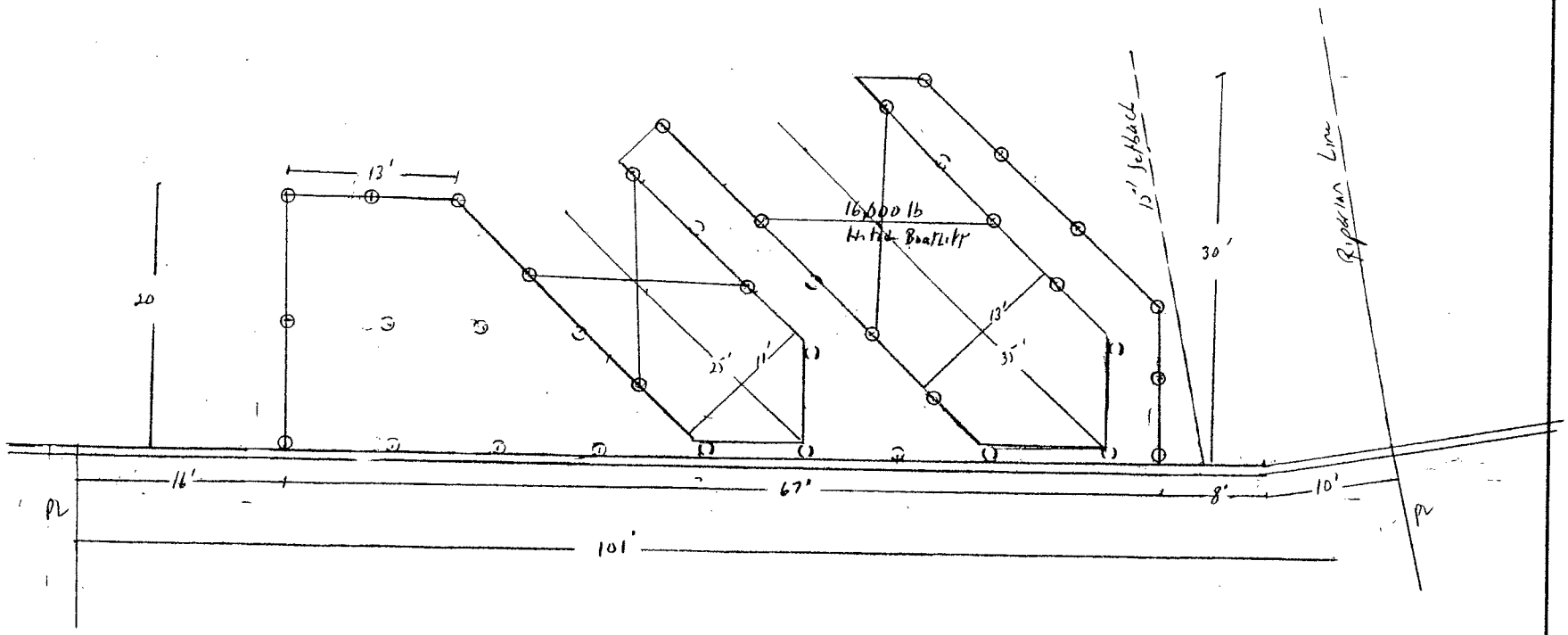

WOLD - 864 INLET DR

SCALE: 1/8"	APPROVED BY:	DRAWN BY:
DATE: ~~8/7/03~~ 9/15/03		REVISED
MARCO DOCK & LIFT, INC.		
		DRAWING NUMBER