MARCO ISLAND PLANNING BOARD RESOLUTION NO. 05-___58

A RESOLUTION APPROVING PETITION NUMBER BD-05-17 FOR A FIVE-FOOT EXTENSION FROM THE MAXIMUM PERMITTED 20 FOOT PROTRUSION INTO THE WATERWAY TO ALLOW FOR A 25-FOOT BOAT DOCKING FACILITY ON PROPERTY LEGALLY DESCRIBED AS MARCO BEACH UNIT 2, BLOCK 59, LOT 9, COLLIER COUNTY, FLORIDA AND THE CITY OF MARCO ISLAND.

WHEREAS, Chapter 54, Article IV, Marco Island Code of Ordinances, regulates the requirements for boat docking facilities on Marco Island; and

WHEREAS, Section 54-115 provides that property owners may petition the City for additional length or protrusion for boat docking facilities beyond the distances set forth in Chapter 54, Article IV, Marco Island Code of Ordinances; and

WHEREAS, pursuant to Section 54-115 and Section 38-40, Marco Island Code of Ordinances, the Marco Island Planning Board is responsible for reviewing and finally approving private boat dock extensions in single-family districts; and

WHEREAS, Petition BD-05-15 is a request for a private boat dock extension as defined in Section 54-115(d), Marco Island Code of Ordinances; and

WHEREAS, Petitioner Harry P. McKean, is the owner of the following property that is the subject of the petition: Marco Beach Unit 2, Block 59, Lot 9, Collier County, Florida and the City of Marco Island; and

WHEREAS, the Petitioner's agent is Marco Marine Construction Inc.; and

WHEREAS, the Marco Island Planning Board has held a public hearing after proper notice, and considered the petition for a five-foot extension of a boat dock from the maximum 20-foot protrusion into the waterway to allow for a 25-foot boat dock facility in a RSF-3 zoning district; and

WHEREAS, the Marco Island Planning Board, following such advertised public hearing, considered public input, the recommendation of the staff, and the standards and guidelines of Section 54-115, "Boat Dock Extensions" of the Marco Island Code of Ordinances; and

WHEREAS, all interested parties have been given the opportunity to be heard by this Board in public meeting assembled, and the Board having considered all matters presented;

NOW THEREFORE, BE IT RESOLVED BY THE CITY OF MARCO ISLAND PLANNING BOARD of the City of Marco Island, Florida that:

Petition BD-05-17 filed by Marco Marine Construction, as agent for Harry P. McKean, property owner, with respect to the following real property:

Marco Beach Unit 2, Block 59, Lot 9, Folio Number: 56797920007, Collier County, Florida

Be and the same is hereby approved for a five-foot extension from the maximum permitted 20-foot protrusion into the waterway to allow for a 25-foot boat dock facility (as shown Exhibit "A") in the RSF-3 zoning district where in said property is located, subject to the following conditions:

1. All docks, or mooring pilings, whichever protrudes the greater into the water, regardless of length shall have reflectors and house numbers four (4) inches minimum size installed at the outermost end on both sides.
2. Any outside lighting on the boat docking facility will comply with Chapter 6, Article V, Marco Island Code of Ordinances, which regulates the requirements of outdoor lighting.
3. The site plan attached to this resolution, also referred to as Exhibit "A," shall be binding upon the property upon approval of the resolution. Any deviation from the approved site plan shall require further consideration by the Planning Board after a properly noticed public hearing.
4. Prior to the issuance of a building permit for the approved boat dock facility, the property owner shall provide the City of Marco Island with a copy of the recorded resolution of approval.

BE IT FURTHER RESOLVED that this Resolution relating to Petition Number BD-05-17 be recorded in the minutes of this Board and filed with the City Clerk's Office.

This resolution adopted after motion, second and majority vote.

Done this 19th day of August 2005.

MARCO ISLAND PLANNING BOARD
MARCO ISLAND, FLORIDA

By: _____
Monte Lazarus, Chairman

Approved as to form and legal sufficiency:

_____
for Gregory L. Urbancic, Esq.
City Attorney

DRAWN BY DONALD P. RICCI JR
DRAWN: 8-10-05

SCALE 1" = 10'

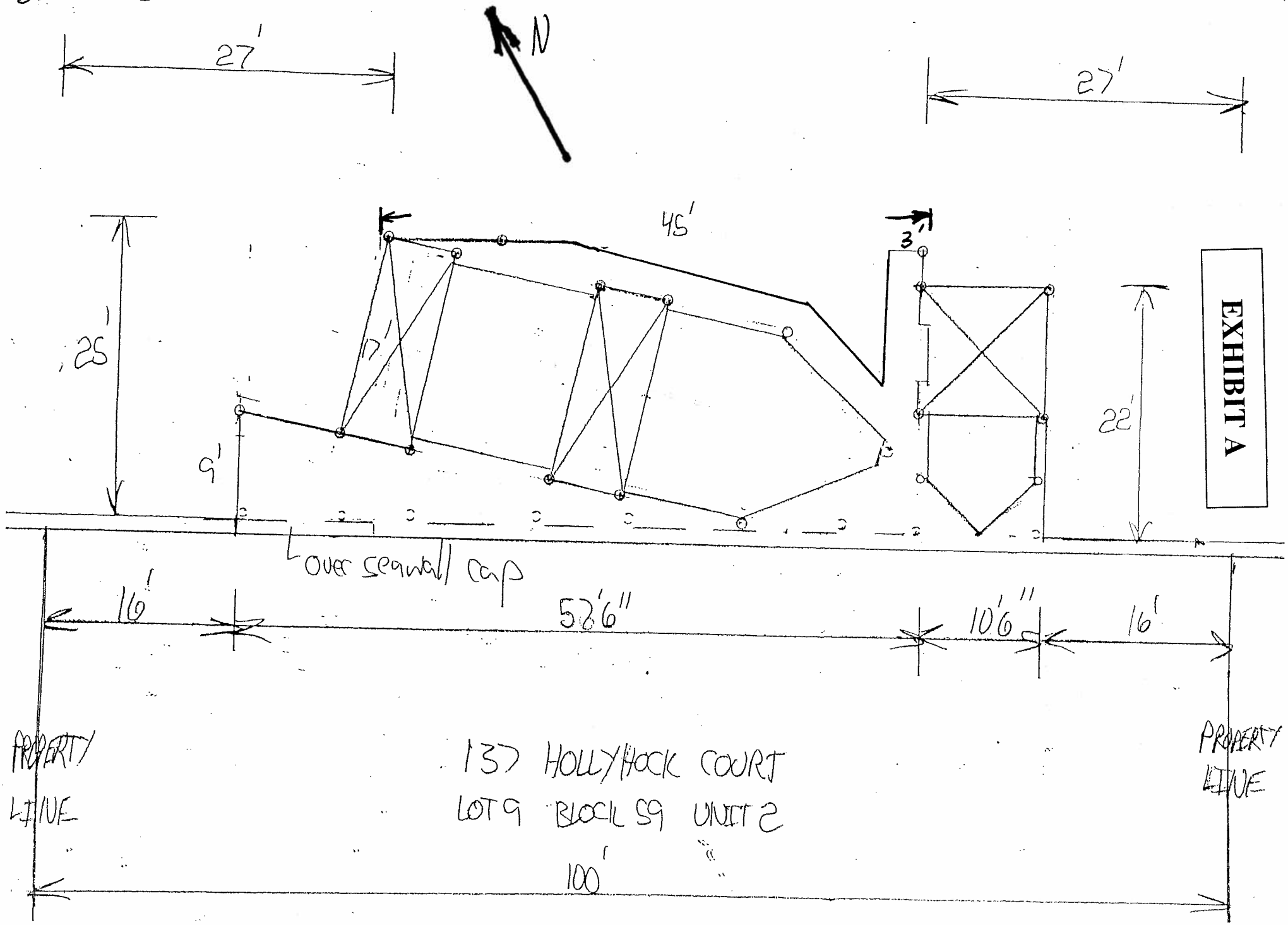

EXHIBIT A