RESOLUTION NO. 06-64

A RESOLUTION TO ADOPT A TECHNICAL SPECIFICATION CONTAINING SEAWALL AND REVETMENT REGULATIONS; AND PROVIDING AN EFFECTIVE DATE.

WHEREAS, the City has repealed Section 6-81 of the Code of Ordinances;

WHEREAS, the City has adopted Ordinance 06- relating to the construction, reconstruction, repair, and alteration of seawalls and revetments adjacent to saltwater bodies to replace said code section;

WHEREAS, said ordinance contemplates that the City will adopt Technical Specifications for the construction and repair of seawalls and revetments;

NOW, THEREFORE, BE IT RESOLVED, by the Council of the City of Marco Island that:

SECTION ONE:

That the City of Marco Island Seawall & Revetment Regulations Technical Specification attached as Exhibit 'A' are hereby adopted and shall be the Technical Specifications contemplated under Ordinance 06-18.

SECTION TWO: EFFECTIVE DATE

This section shall become effective upon adoption by the City Council.

Passed in open and regular session through roll call vote by the City Council of the City of Marco Island, Florida this 4th day of December, 2006.

Attest:

Laura Litzan, City Clerk

CITY OF MARCO ISLAND, FLORIDA

By: Terri DiSciullo
Terri DiSciullo, Chairwoman

Approved as to Form:

Richard D. Yovanovich
City Attorney

EXHIBIT A

CITY OF MARCO ISLAND SEAWALL & REVETMENT REGULATIONS
TECHNICAL SPECIFICATION

SECTION 1: DESCRIPTION

The work described herein consists of the design and construction of waterfront upland property and building protection structures such as seawalls and revetments, which serve to protect against wave action and to stabilize the position of the shoreline.

These design and construction standards provide minimum requirements for all seawalls and revetments constructed, reconstructed, repaired or altered.

SECTION 2: DESIGN CONSIDERATIONS

A. General

A professional engineer registered in the State of Florida shall prepare all plans and specifications for seawalls and revetments. The professional engineer shall be qualified by training and experience to provide seawall and revetment design.

B. Criteria

1. Figure 1 (attached) provides soil and site parameters for structural design.

2. As a minimum, the seawall shall be adequate to sustain the loads shown on Figure 1.

3. Design of seawalls shall be in accordance with generally accepted engineering design methodologies such as those published by the Portland Cement Association, American Concrete Institute, U S Steel Sheet Pile Manual, Aluminum Association, Composite wall manufacturers, and "Pile Buck" sheet pile wall design. New technologies exhibiting acceptable engineering standards are also acceptable for design. Maximum initial panel deflection shall be the exposed face (inches) divided by 12.

4. Seawalls may be designed as cantilever walls without the use of a tieback system. An expansion joint is required where a cantilever wall abuts a tied-back wall. Initial deflection at the top of the cantilever seawall shall not exceed 1".

5. T-pile seawalls shall not be used to replace existing seawalls.

6. Structural repairs to seawalls shall comply with the applicable specifications contained herein.

SECTION 3: GENERAL REQUIREMENTS

A. Location: See Ordinance, SECTION SIX, Paragraph D.

B. Top of Seawall Construction Elevation: See Ordinance, SECTION SIX, Paragraph E.

C. Fill (soil)

The only fill authorized herein shall be for fill behind the seawalls or revetments and shall not exceed any further waterward than the face of the new seawall construction or the face of the existing seawall for repairs or the highest elevation of revetment construction. Fill behind the seawall extending a minimum of 5' from the wall shall be from upland sources and consist of clean granular material (less than 10% passing no. 200 sieve) free from pollutants. The filling of wetlands is not allowed. The toe-berm may be restored after the construction by moving displaced soil under water back into its original position. Fill in the form of small toe-berm rip-rap protection in front of the seawall is allowed as shown on Figure 2.

D. Clean-up after construction/repairs

Upon completion of construction/repairs, restore waterway to pre-construction depths, including the removal of displaced soils from the lot due to sheet pile jetting, and other construction activities, removal of soil that leaked through the seawall joints prior to construction, and removal of construction debris from the waterway. Extent of clean-up shall be all areas impacted, including directly in front of the property and extending as necessary onto the waterway in front of adjacent properties. Restore the toe-berm to its preconstruction depth unless permit specifies otherwise.

SECTION 4: RESTRICTIVE SPECIFICATIONS

A. General

1. The Standard Specifications of the Florida Department of Transportation for Road and Bridge Construction, Latest Edition, shall govern all construction. The American Concrete Institute Standard 318. "Building Code Requirements for Reinforced Concrete", Latest Edition shall govern concrete and reinforcing steel. Concrete Class designated herein refers to Section 346 of the Florida Department of Transportation Specification.

2. References to tie-back rods and anchors in the following sections do not restrict seawall design to tied-back seawall design. Where required, the tieback rods shall be straight between the wall cap and the anchors.

3. Seawall construction shall conform to the following tolerances of construction and placement:

Fabrication Tolerances:

Sheet pile width: + or – 1/4" per 10' length.
Sheet pile length: + or – 2"
Concrete sheet pile thickness: +or - 1/4"

Erection/Placement Tolerances:

Concrete sheet pile reinforcing clear distance to concrete surface: +1/2", -1/2"
Concrete sheet pile reinforcing bar spacing: + or – 1"
Seawall cap top and formed surfaces: + or – ½"
Horizontal alignment of front face of sheet pile: + or – 1"
In plane plumbness: 2" per 10' sheet pile length.
Transverse plumbness: 2" per 10' sheet pile length
Key Joint separation: Maximum ½" except maximum ¾" allowed for up to 10% of key joints.
Exposed height: 6"

4. Sheet piling shall penetrate into firm soil a minimum of 40% of the total length of the sheet pile but not less than 4 feet. This penetration may be adjusted if the bottom of the sheet pile can be embedded a minimum of 12 inches into solid bedrock.

5. The toe-berm of all sheet pile seawalls shall be protected by a rip-rap revetment placed on filter fabric as follows:

a. At locations where soils will not adequately resist toe-out failure by additional penetration depth alone

b. At locations where lateral tidal flows create excessive scour and erosion of the toe-berm.

c. At any other location where the design Engineer deems it necessary for the preservation of the integrity of the seawall.

6. Acceptable materials for seawall construction are:

a) Precast reinforced concrete sheet pile units
b) Prestressed concrete sheet pile units
c) Aluminum sheet piles
d) Vinyl (PVC) sheet piles
e) Fiber reinforced/carbon enhanced resin composite sheet piles
f) Steel sheet piles with protective marine coating (Commercial only-special permit only)

Color of seawalls shall be solid tones of gray.

Timber is unacceptable for seawalls. Steel is unacceptable for residential seawalls.

All seawall caps shall be of reinforced concrete to provide uniformity to the City's seawalls. Provide cap expansion joints at panel tongue and groove joint nearest to a property line.

Tie-back rods shall be Grade 60 reinforcing or hot dipped galvanized as a minimum. Series 300 Stainless steel is also acceptable for use for reinforcing and tie-back rods. Do not use MMFX reinforcing as tie-back rods. Additionally, hot dipped galvanized rods shall be wrapped with polyethylene. Concrete for concrete anchors shall have a 28-day minimum compressive strength of 3,000 psi.

Provide a positive means to reduce the build-up of hydrostatic pressure behind the seawall by the use of weep holes protected by filter fabric and "French drains" consisting of gravel wrapped with filter fabric.

Figures 1, 2, and 3 provide other minimum requirements for seawalls.

B. Concrete Sheet Pile Seawalls

1. All seawalls and caps shall consist of one of the following combinations of materials:

a) Florida Department of Transportation Class IV concrete (Section 346-extremely aggressive environment) with either or both prestressing strand (ASTM A416 Grade 270) and grade 60 reinforcing steel. For caps only, dense concrete mix with a compressive strength of 5,000 psi, low water/cement ratio (0.4) and smaller aggregate suitable for pumps may be substituted for the FDOT concrete.

b) 4,000 psi minimum 28-day compressive strength concrete with maximum water-cement ratio of .45 and MMFX or stainless reinforcing steel.

c) Florida Department of Transportation Class IV concrete (Section 346-extremely aggressive environment) with MMFX or stainless reinforcing steel. The substitution for cap concrete in a) above is applicable here.

2. Each panel shall have tongue and groove side joints, and be a minimum of 6" in thickness with the reinforcing centered. If 8" thickness or greater is required, a double mat of reinforcing is allowed, but with a minimum cover of 2".

3. Provide minimum 2' wide woven filter fabric strip behind each tongue and groove joint from bottom of cap down to 1' below the top of the toe-berm.

4. Do not grout or plaster over keyway joints between the sheet piles.

5. Minimum seawall standards are shown in Figures 2 and 3, attached.

C. Aluminum Sheet Pile Seawalls

1. No aluminum shall be used in contact with non-draining cohesive soils.

2. Use only structural grade aluminum sheeting that has been demonstrated to be suitable for marine use.

3. Provide protection for the portion of the aluminum sheeting to be embedded into the concrete cap such as coal tar epoxy or mechacrylate lacquer.

4. Provide minimum .125" thick material.

D. Vinyl (PVC) Seawall panels and Fiber reinforced/carbon enhanced resin composite sheet piles

1. Seawall panels shall be manufactured with UV resistant material.

E. Revetments

1. The work under this Section includes heavy armoring consisting of large rip-rap placed on a stable sloping sub-grade to protect upland property.

2. The revetment shall be placed on a uneven, possibly stepped compacted slope with a gradient not exceeding one foot vertical drop for every two feet of horizontal distance (top of revetment stone). The uneveness is intended to restrain the revetment stone from sliding on the fabric.

3. All revetments shall be placed on a woven plastic filter fabric in accordance with FDOT Specifications, Section 514. Filter fabric shall be approved by FDOT for shoreline stabilization use. The fabric shall be folded over and anchored by larger stone at the toe of the revetment slope. A layer of 1" to 4" stone shall be placed directly on the fabric as a cushion for the rip-rap stone.

4. As a minimum, the rip-rap stone shall comply with FDOT Specifications, Section 530, Rubble (Bank and Shore).

5. Other approved armoring systems may be approved by the City on a specific basis. However, the use of sand-cement bags is not approved for revetments.

6. See Figure 4 for revetment standards.

7. The above does not apply to toe-berm protection.

SECTION 5: PERFORMANCE REQUIREMENTS

This specification provides minimum requirements for seawalls and revetments, which are constructed within the City. Individual design is the responsibility of the landowner, based upon specific site conditions, type of shore stabilization structure desired, method of construction, and all other factors affecting the stability of the structure. This specification is not to be considered a final design relating to a specific site or any other affecting conditions.

SECTION 6: SEAWALL INSPECTION AND QUALITY CONTROL SCHEDULE

Building and Planning Division personnel shall conduct site visits for observation of seawall construction to determine compliance with permitted construction plans and specifications. These inspections shall occur at the following construction "milestones"(where applicable):

1) Prior to construction, recording of exposed height above toe-berm at a minimum of three locations: center and each end at property lines
2) Forming of concrete sheet piles and placement of reinforcing prior to concrete placement
3) Seawall placement, with filter fabric, including proper length, and weep holes prior to backfilling.
4) Anchor reinforcement/tieback placement, and concrete cap forming and reinforcement, including expansion joints.
5) Toe-berm riprap, french drains, final grades, final exposed height, and post-construction clean-up.

Test all concrete used in seawall sheet pile and cap construction for 28 day compressive cylinder strength as per ASTM C-39, using a minimum of 2 cylinders for testing. Cast an additional cylinder to hold for later testing. Cast a 3 cylinder set for each day's pour. Separate tests shall be performed for concrete sheet piles and seawall cap. Use a qualified independent engineering testing laboratory Provide written test results to the City upon completion.

Alternatively, 7 day tests are acceptable in lieu of 28 day tests of concrete cylinders. The average 7 day compressive strength for each 2 cylinder test shall be a minimum of 70% of the specified 28 day compressive strength.

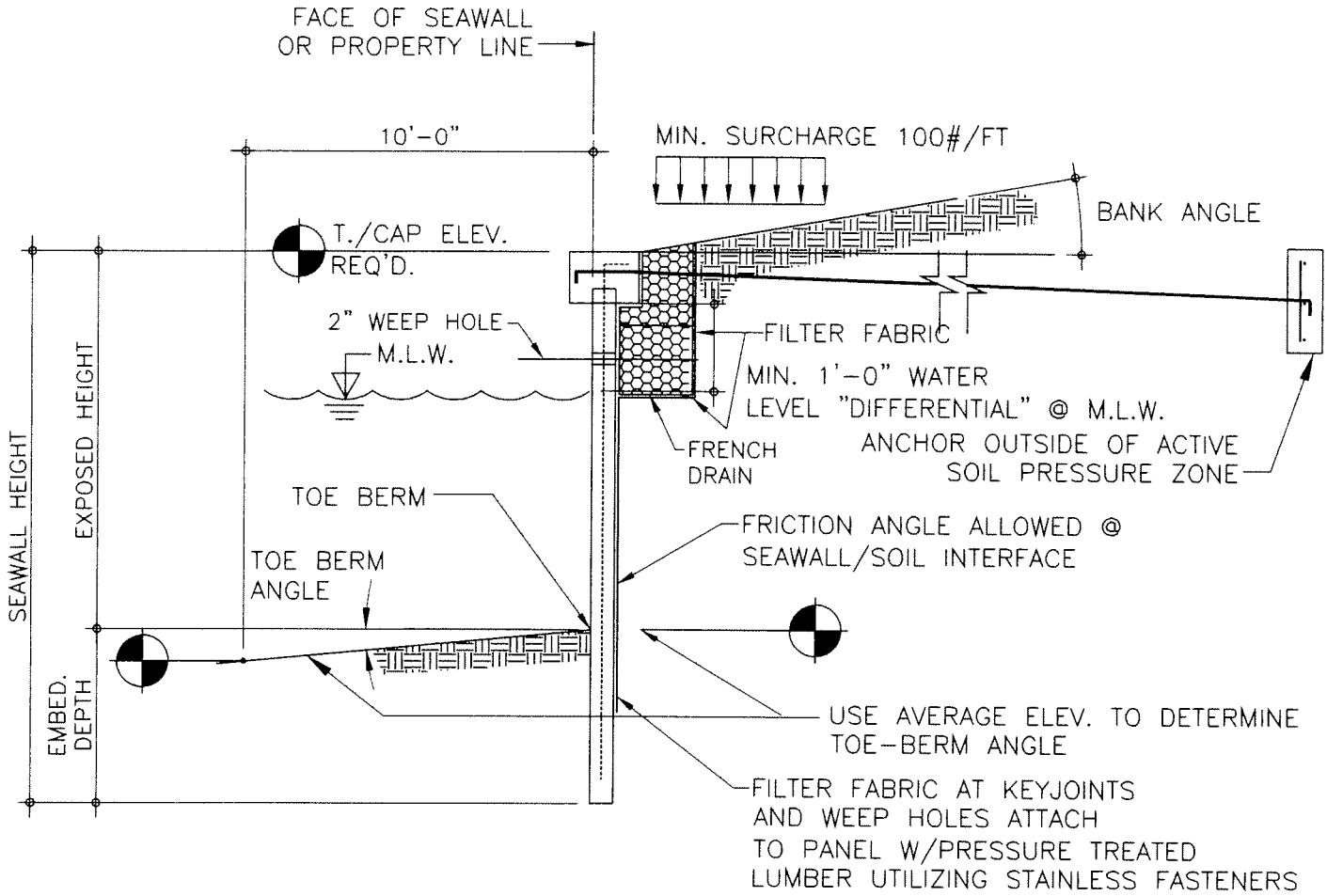

SHEET PILE WALL SECTION

SOIL PARAMETERS:

DRY DENSITY..... PCF.
SATURATED DENSITY..... PCF.
BUOYANT DENSITY..... PCF.
ANGLE OF INTERNAL FRICTION = DEGREES (ANGLE OF REPOSE).
SOIL SEAWALL FRICTION ANGLE = DEGREES.

SITE PARAMETERS:

EXPOSED HEIGHT..... FEET.
ANCHOR LOCATION..... FEET.
BANK ANGLE..... DEGREES.
TOE-BERM ANGLE..... DEGREES.
SURCHARGE..... PSF.
LAG..... FT.

JENKINS & CHARLAND INCORPORATED Consulting Engineers
12381 Cleveland Avenue
Suite 204
Fort Myers, FL 33907
PH.(239) 939-1414
FAX (239) 278-4289
C.A. No. 650

DATE: MARCH 2006 PROJ. NO: 05FTM405 DRAWN BY: DEF APPD. BY: PC DRAW. NO: 1/4 SCALE: NTS	CITY OF MARCO ISLAND PUBLIC WORKS 50 BALD EAGLE DRIVE MARCO ISLAND, FLORIDA 34145	FIGURE 1 CITY OF MARCO ISLAND SEAWALL DESIGN CRITERIA	SHEET 7 OF 10

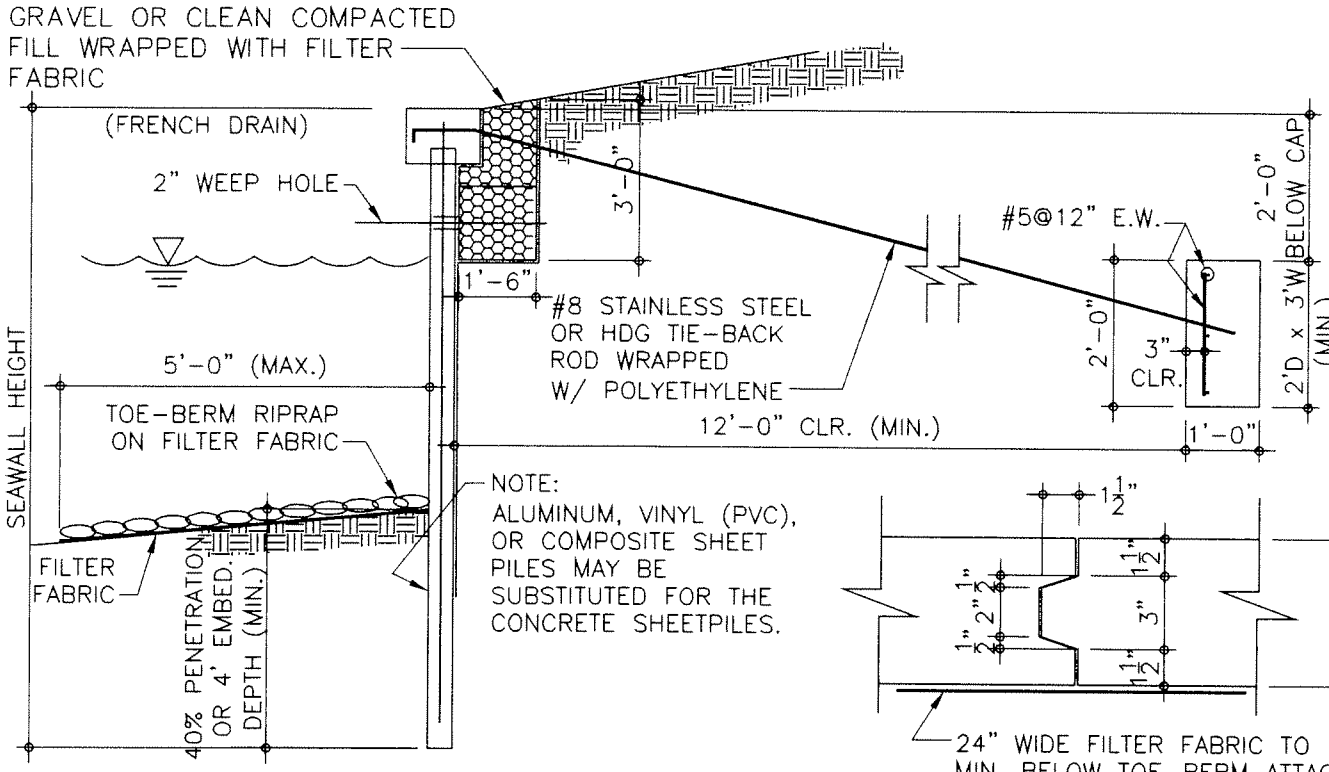

SECTION TYPICAL SEAWALL

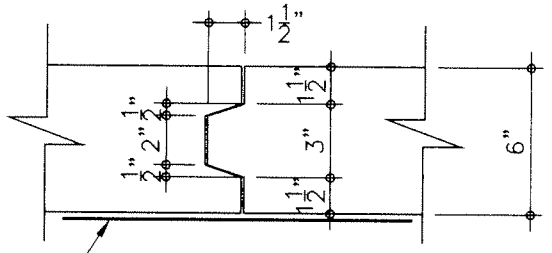

KEY JOINT

REINFORCED CONCRETE SHEET PILES

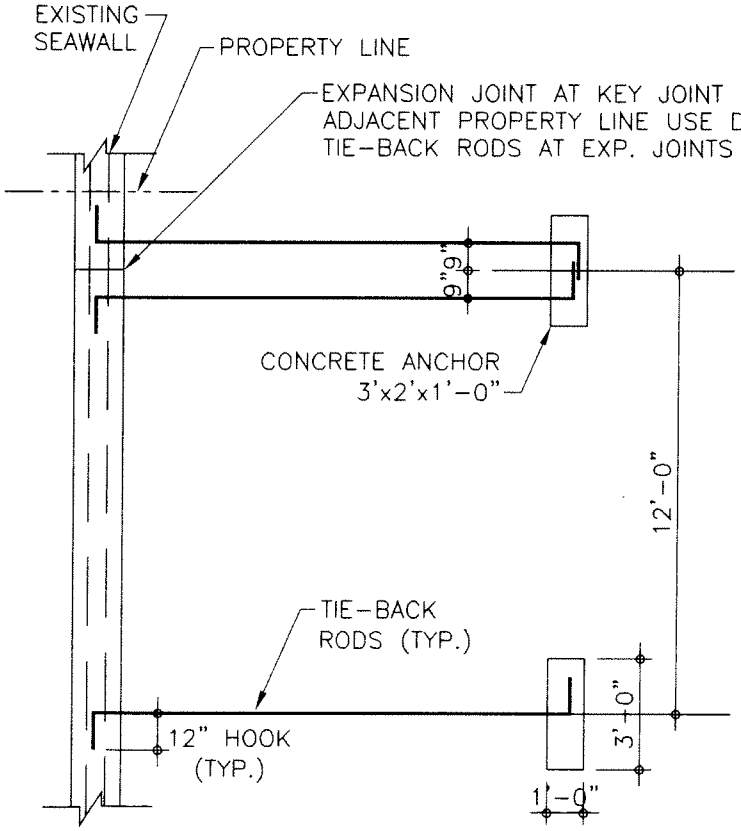

PLAN TYPICAL SEAWALL

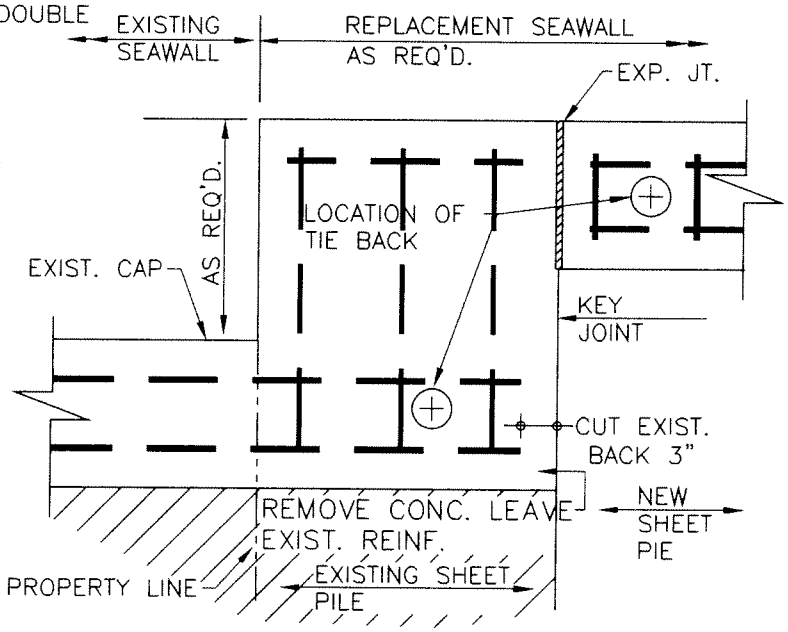

EXPANSION JOINT DETAIL

JENKINS & CHARLAND INCORPORATED Consulting Engineers
12381 Cleveland Avenue
Suite 204
Fort Myers, FL 33907
PH.(239) 939-1414
FAX (239) 278-4289
C.A. No. 650

DATE: MARCH 2006 PROJ. NO: 05FTM405 DRAWN BY: DEF APPD. BY: PC DRAW. NO: 2/4 SCALE: NTS	CITY OF MARCO ISLAND PUBLIC WORKS 50 BALD EAGLE DRIVE MARCO ISLAND, FLORIDA 34145	FIGURE 2 CITY OF MARCO ISLAND SEAWALL STANDARDS	SHEET 8 OF 10

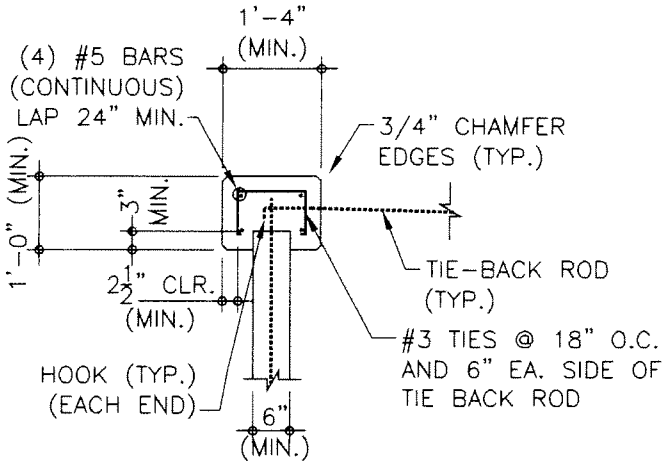

CAP DETAIL

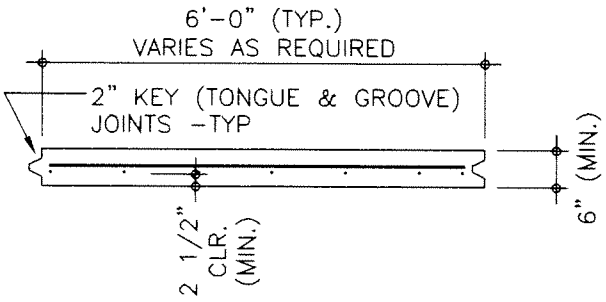

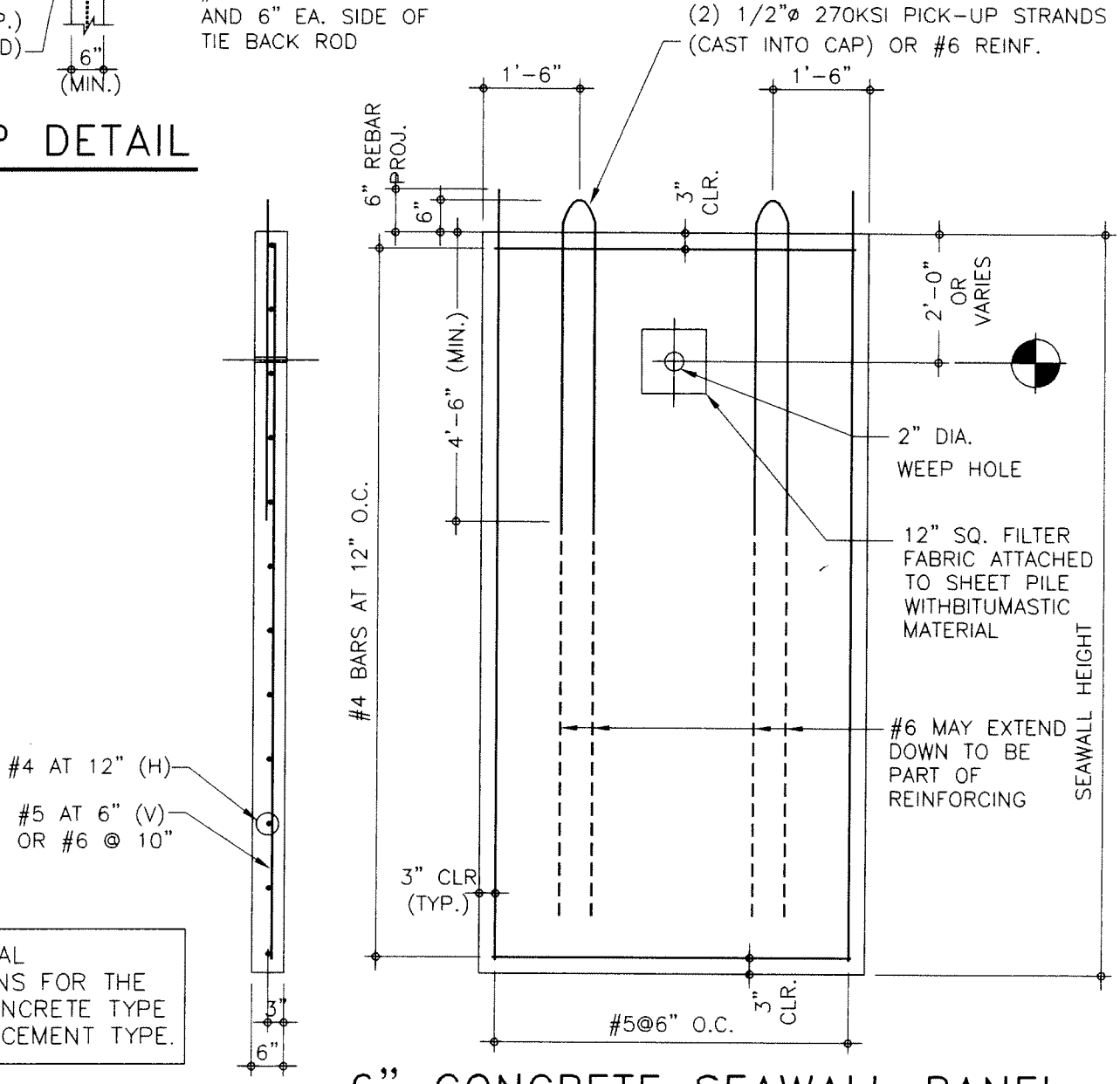

SEE TECHNICAL SPECIFICATIONS FOR THE REQUIRED CONCRETE TYPE AND REINFORCEMENT TYPE.

6" CONCRETE SEAWALL PANEL

JENKINS & CHARLAND INCORPORATED Consulting Engineers
12381 Cleveland Avenue
Suite 204
Fort Myers, FL 33907
PH.(239) 939-1414
FAX (239) 278-4289
C.A. No. 650

DATE: MARCH 2006 PROJ. NO: 05FTM405 DRAWN BY: DEF APPD. BY: PC DRAW. NO: 3/4 SCALE: NTS	CITY OF MARCO ISLAND PUBLIC WORKS 50 BALD EAGLE DRIVE MARCO ISLAND, FLORIDA 34145	FIGURE 3 CITY OF MARCO ISLAND SEAWALL STANDARDS	SHEET 9 OF 10

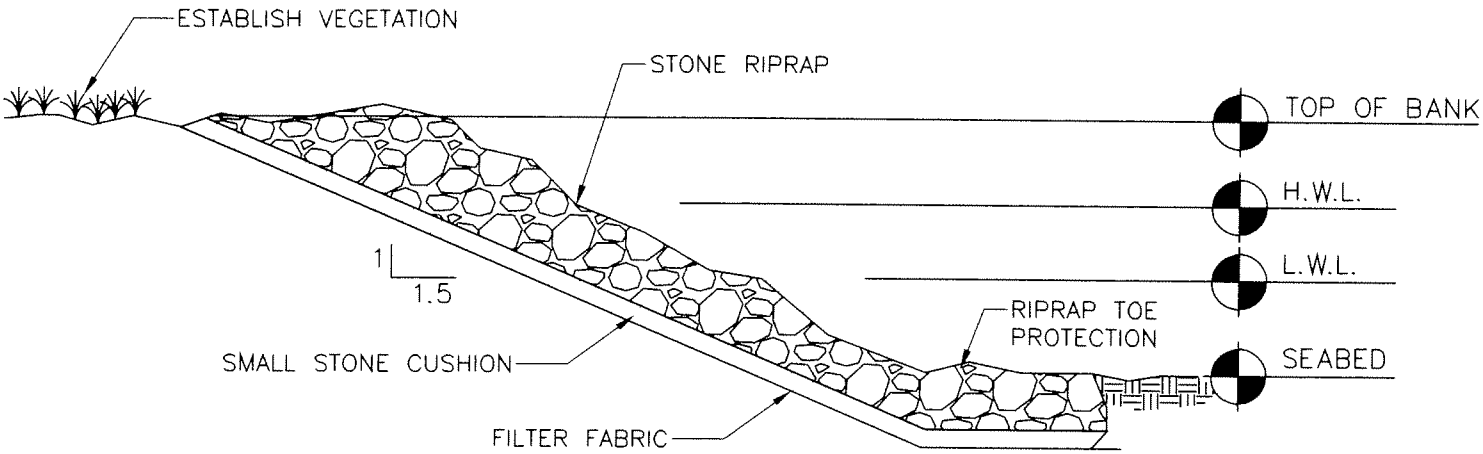

TYPICAL STONE REVETMENT

JENKINS & CHARLAND INCORPORATED
Consulting Engineers
12381 Cleveland Avenue
Suite 204
Fort Myers, FL 33907
PH.(239) 939-1414
FAX (239) 278-4289
C.A. No. 650

DATE: MARCH 2006 PROJ. NO: 05FTM405 DRAWN BY: DEF APPD. BY: PC DRAW. NO: 4/4 SCALE: NTS	CITY OF MARCO ISLAND PUBLIC WORKS 50 BALD EAGLE DRIVE MARCO ISLAND, FLORIDA 34145	FIGURE 4 CITY OF MARCO ISLAND REVETMENT STANDARD	SHEET 10 OF 10