City of Marco Island

CONSTRUCTION STANDARDS HANDBOOK

For

Work Within the Public Right-of-Way

Adopted Pursuant to Ordinance No. 15-05

Effective Date July 20th,2015

Exhibit A

City of Marco Island Construction Standards Handbook
Public Right-of-Way

TABLE OF CONTENTS

SECTION	PAGE
Sec. 1: DEFINITIONS	4
Sec. 2: PURPOSE, INTENT AND APPLICATION	12
Sec. 3: PUBLIC UTILITY EXEMPTION	18
Sec. 4: SURVEY MONUMENTS	19
Sec. 5: REQUIREMENTS FOR RIGHT-OF-WAY PERMITS	20
Sec. 6: PERMIT INSTRUCTIONS	24
Sec. 7: STANDARD REQUIREMENTS FOR THE WORK	28
Sec. 8: SPECIAL REQUIREMENTS FOR RESTORATION OF RIGHT-OF-WAY AND MAINTENANCE OF FACILITIES	39
Sec. 9: STREET/ALLEY MATERIALS & CONSTRUCTION	42
Sec. 10: DRIVEWAY/ACCESS ROAD REQUIREMENTS	44
Sec. 11: STORM DRAINAGE IMPROVEMENTS	51
Sec. 12: STORMWATER MANAGEMENT REQUIREMENTS	55

Sec. 13: SOD AND APPROVED GROUNDCOVER PLACEMENT 61

Sec.14: SIDEWALK / BIKEWAY CONSTRUCTION 63

Sec.15: ALLEY IMPROVEMENTS 66

Sec.16: ON STREET PARKING 70

Sec. 17: DRAWINGS AND ILLUSTRATIONS REPRESENTING MINIMUM REQUIREMENTS FOR USE IN THE PUBLIC RIGHT-OF-WAY 72

APPENDIX A – CITY OF MARCO ISLAND PUBLIC WORKS DEPARTMENT – RECOMMENDED MINIMUM PRACTICES FOR RIGHT-OF-WAY LANDSCAPING AND IRRIGATION MAINTENANCE 93

APPENDIX B – CITY OF MARCO ISLAND PUBLIC WORKS DEPARTMENT TRAFFIC IMPACT STUDY REQUIREMENTS 113

APPENDIX C – LISTING OF TYPICAL DESIGN STANDARDS 123

SECTION 1: DEFINITIONS

For the use, purpose and application of this Construction Standards Handbook for Work within the Public Right-of-Way and the authorizing Ordinance, the following terms shall have the stated meanings ascribed to them except in instances where the context clearly indicates a different meaning or definition:

1. ACCESS ROAD / DRIVEWAY

That paved or unpaved portion of the right-of-way in which the intended use is to provide for traffic ingress or egress from the edge of the traveled way.

2. ADT

Average daily two-way volume of traffic.

3. ARTERIAL ROADS

Arterial roads means a road whose primary purpose is provide relatively continuous service, high traffic volume, long trip length and high operating speed.

4. AVERAGE RUNNING SPEED

For all traffic, or a component thereof, the summation of distances traveled divided by the summation of running times.

5. BICYCLE

Every vehicle propelled solely by human power upon which any person may ride, having two tandem wheels, and including any vehicle generally recognized as a bicycle though equipped with two front or two rear wheels, except such vehicles with a set height of no more than 25 inches from the ground when the seat is adjusted to its highest position and except scooters and similar devices.

6. BICYCLE LANE OR BIKE LANE

A portion of a roadway that has been designated by striping, signing and pavement markings for the preferential or exclusive use of bicyclists.

7. BICYCLE PATH OR BIKE PATH

A bikeway physically separated from motorized vehicular traffic by an open space or barrier and either within the highway right-of-way or within an independent right-of-way.

8. BICYCLE ROUTE OR BIKE ROUTE

A segment of a system of bikeways designated by the jurisdiction having authority with appropriate directional and informational markers, with or without a specific bicycle route number.

9. BIKEWAY

Any road, path or way that in some manner is specifically designated as being open to bicycle travel, regardless of whether such facilities are designated for the exclusive use of bicycles or are to be shared with other transportation modes.

10. CLEAR ZONE

The total roadside border area beginning at the edge of the motor vehicle travel lane available for safe use by errant vehicles. This area may consist of a shoulder, a recoverable slope, a non-recoverable slope, or a clear run-out area. The desired width is dependent upon the traffic volumes and speeds, and on the roadside geometry and site conditions.

11. COLLECTOR ROADS

Collector roads means a road whose primary purpose is service of moderate traffic volume, moderate trip length and operating speed, collects and distributes traffic between local and arterial roads.

12. DENSITY TEST

A laboratory or field procedure to measure the degree of compaction of a roadway, sub-grade, soil, sub-base, and base or asphalt surface course compacted to 98% of maximum density in accordance with specifications set forth under by AASHTO T-180 or by the State of Florida Department of Transportation.

13. DESIGN SPEED

A speed determined for design and correlation of the physical features of a highway that influence vehicle operation. It is the maximum safe speed that can be maintained over a specific section of highway when conditions are so favorable that the design features of the highway govern.

14. DHV

Design hourly two-way volume of traffic.

15. DRIVEWAY WIDTH

Narrowest width of driveway measured at the property line/right-of-way line.

16. FACILITY

Any (existing or proposed) hole, excavation, obstruction, growth, material, construction, disturbance of ground surface or structures or compaction of the soil in City public right-of-way or easements. Facility also means any (existing or proposed) plant, equipment or material, including but not limited to sewer, gas, water, electric, storm drainage, communications, and other types of facilities, cables or conduit, ducts, fiber optics, poles, antennae, converters, splice boxes, cabinets, hand holes, manholes, vaults, inlets, drains, catch basins, water management devices or systems, surface location markers, appurtenances, roadway, sidewalk, pathway and other improvements or construction work placed or maintained or to be placed or maintained in right-of-way or easements of the City. A Facility may be temporary or permanent.

17. FLORIDA FRIENDLY LANDSCAPE (FFL)

FFL means using low maintenance plants and environmentally sustainable practices that reduce maintenance and save money. The nine principles of FFL are: (1) Right Plant, Right Place; (2) Water Efficiently; (3) Fertilize appropriately; (4) Mulch; (5) Attract Wildlife; (6) Manage Yard Pests; (7) Recycle; (8) Reduce Storm Water Runoff; and (9) Protect Waterfront

18. FRONTAGE

The length of the front yard, rear yard or side yard property line, which lies along a public right-of-way or easement.

19. FRONTAGE ROAD

A street or highway constructed adjacent to a higher classification street or other roadway network for the purpose of serving adjacent property or for the control of access.

20. HORIZONTAL CLEARANCE

Lateral distance from edge of a motor vehicle travel lane to a roadside object or feature.

21. INTERSECTION

The general area where two or more streets, highways or related transportation facilities join or cross.

22. INVERT ELEVATION

Surface flow line elevation of a drainage pipe or drainage facility.

23. LOCAL RESIDENTIAL STREET

Local residential street means a street whose primary purpose is to provide access to the properties that front it.

24. MAY

Exclusively a permissive condition. Where the word "may" is used, it is considered to denote permissive usage.

25. MEDIAN

The curbed or non-curbed central area of a divided roadway or highway separated by opposing travel lanes. The median may be raised and crowned or lowered and inverted from the edge of pavement of travel lanes.

26. MONUMENT

An official and permanent artificial boundary marker located or placed within public right-of-way or public easements or on public right-of-way lines and easement lines such as concrete monuments, iron pipes, iron pins with survey caps, survey discs, boat spikes, railroad spikes and similar approved marker devices.

27. NEW CONSTRUCTION

The construction of any Facility within public right-of-way where none previously existed.

28. UNAUTHORIZED FACILITY

Any Facility placed, grown, installed or constructed or placed in City public right-of-way and easements without issuance of an approved right-of-way construction permit. A Facility not reviewed or permitted by the City may endanger persons, damage the existing right-of-way improvements, restrict existing or planned drainage, impair maintenance activities, or otherwise may have the potential to do any of the foregoing and consequentially shall be considered as unauthorized subject to removal. The definition of Unauthorized Facility shall not include Facilities placed, grown, installed or constructed in City public right-of-way that are in compliance with an approved City right-of-way construction permit for subdivision improvements including landscaping as evidenced by the final construction plans and specifications of said approved subdivision.

29. OPERATING SPEED

The highest overall speed at which a driver can safely travel on a given highway under favorable weather conditions and under prevailing traffic conditions without at any time exceeding the safe speed as determined by the design speed on a section-by-section basis.

30. PERMIT

A right-of-way construction permit that must be obtained before placing, growing, installing, constructing, or maintaining improvements or undertaking construction work in City public right-of-way or easements.

31. PERMITTEE

The owner of the improvements or construction work and includes any individual, person, firm, association, joint venture, partnership, estate, trust, business trust, syndicate, fiduciary, corporation, authority, organization or legal entity of any kind, successor, assignee, transferee, personal representative, and all other groups or combinations that has been issued a right-of-way construction permit by the City.

Permittee shall not mean or include contractors, subcontractors, consultants and other parties providing services to the owner within City right-of-way or easements. A permittee may be an authorized agent of the owner on the condition that a notarized letter signed by the owner, which confirms the agency relationship and limits of delegated authority, is submitted with an application for a right-of-way construction permit.

32. PRIVATE STREET

Private street means a recorded street owned and maintained by the abutting property owners.

33. PUBLIC WORKS DEPARTMENT

The Public Works Director of the City of Marco Island or authorized representative(s).

34. RADIUS

A line segment extending from the center of a circle to the curve.

35. RECONSTRUCTION

Any road construction or the construction of any other Facility within public right-of-way or easement where none previously existed. All construction other than new construction.

36. RECOVERY AREA

Generally synonymous with clear zone.

37. RESIDENTIAL STREETS

Streets primarily serving residential access to the commercial, social, and recreational needs of the community. These are generally lower volume and lower speed facilities than the primary arterial and collector routes of the transportation system or as adopted by City Ordinance.

38. RESPONSIBLE PERSON

Any individual, person, firm, association, joint venture, partnership, estate, trust, business trust, syndicate, fiduciary, corporation, authority, organization or legal entity of any kind, successor, assignee, transferee, personal representative, and all other groups or combinations under whose control and direction offending materials have been placed, grown, installed or constructed in City public right-of-way or easements without an authorized right-of-way construction permit; or

Where the identity of the responsible person, under whose control and direction the offending material was placed, grown, installed or constructed in the right-of-way or easement without authorization remains unknown after reasonable inquiry said responsible person shall be presumed to mean the owner of the offending material or unauthorized improvements or construction work.

39. RIGHT-OF-WAY

Shall mean a public right-of-way, public easement, highway, street, bridge, roadway, or alley for which the City is the authority that has jurisdiction and control and may lawfully grant access pursuant to applicable law, and includes the ground surface, the air space over the ground surface and the area below the ground surface. Right-of-way also means a strip of land dedicated as an easement or deeded in fee simple ownership to the public and accepted by the City, with such land being occupied or intended to be occupied by a street, driveway, access road, crosswalk, railroad, electric power line, oil or gas pipeline, street sign, street light, traffic signal, storm drainage system, water main, sanitary or storm sewer main, sidewalk, bicycle path, shared use path, or any similar conventional or special use or public infrastructure and facilities. Right-of-way shall not include private property with the exception of public easements.

40. ROADWAY

The portion of a street or highway, including shoulders, for the intended use of vehicles.

41. SECONDARY ROAD

Collector or arterial road as defined by the Florida Department of Transportation functional road classification system as revised by the City of Marco Island.

42. SHALL

A mandatory condition. When certain requirements are described and stipulated with the word "shall", it is mandatory that said requirements must be met.

43. SHOULD

An advisory condition. Where word "should" is used, it is considered to denote permissive usage.

44. SIDEWALK

Means the portion of a street right-of-way for preferential or exclusive use by pedestrians.

45. SIDEWALK/BIKE PATH (OR SHARED USE PATH)

Means the combined use of a portion of a street right-of-way for both pedestrians and bicycles.

46. SLOPES
Slopes for the purpose of this Public Right-of-Way Construction Standards Handbook and authorizing Ordinance are expressed as a ratio of horizontal to vertical (H:V).

47. STATE ROAD

Any right-of-way and improvements thereupon, which is under the jurisdiction of the Florida Department of Transportation (FDOT).

48. SWALE

An open drainage feature along a roadway used for Stormwater conveyance. The swale area is the area between the edge of the pavement of a roadway, or curb, and the inside edge of the sidewalk or right-of-way boundary if no sidewalk is present.

49. TRAFFIC CONTROL DEVICES

All signs, traffic signals, markings and devices, placed or erected by or under direction of a public body or official having legal jurisdiction for the purpose of regulating, warning or guiding vehicular or pedestrian traffic.

50. TRAVELED WAY

The portion of the roadway for the movement of vehicles exclusive of shoulders.

51. TURNOUT

Driveway entrance widening at the junction with a roadway edge of pavement of a travel lane.

52. UNDESIGNATED BIKE LANE

A bike lane that is not designated with the bike and arrow pavement markings. It may be striped as a regular bike lane on approaches to intersections.

53. VEHICLE

Every device by which any person or property is being transported or may be transported

or drawn upon a travel way with the exception of devices used exclusively upon stationary rails or tracks.

54. VEHICLE RECOVERY AREA

A vehicle travel area outside of the traveled way, which can be traversed or traveled upon in an emergency with moderate safety.

55. WIDE CURB LANE

A portion of the roadway that can be used by bicycles and motorized traffic, characterized by a wide curb lane, which is of such width that bicycle and motorized traffic can be accomplished in the same lane. This lane is usually the through lane closest to the curb (when a curb is provided) or the shoulder edge of the road when a curb is not provided.

SECTION 2: PURPOSE, INTENT AND APPLICATION

1. This Construction Standards Handbook for Work within the Public Right-of-Way (hereinafter referred to as "Handbook") was developed with the express intent of regulating the location, type, manner, character, adjustment and installation of all Facilities, improvements and construction work to be performed within public right-of-way and various easements under the jurisdiction of the City of Marco Island.

2. The City's regulation of proposed improvements and construction work as set forth herein is applicable to all public right-of-way and easements through the administration and issuance of right-of-way construction permits so as to:

    a. Preserve the interest of public health, safety and welfare;

    b. Protect existing public and private utilities and facilities from damage;

    c. Maximize the ease and effectiveness of long-term maintenance and operations by the City and other parties;

    d. Minimize the cost burden of long-term maintenance and operations;

    e. Avoid or minimize adverse environmental and drainage impacts to public and private lands;

    f. Preserve the level of service and integrity of the City's transportation network and streetscape amenities; and

    g. Provide for best management practices (BMP) for future development of the City's street, drainage and utility system within public right-of-way and easements.

    h. Provide for the unimpeded access for Emergency vehicles.

3. Accordingly, the purpose of this Handbook is to provide standards, procedures, and requirements for improvements and construction work proposed within the City's public right-of-way and easements in the best interest of the public and for the protection of public property.

4. Also included in this Handbook are drawings and illustrations that represent minimum construction and installation requirements by the City attendant to issuance of all right-of-way construction permits. Such minimum requirements may include compliance with applicable criteria and standards for engineering design, construction and maintenance as promulgated by the State of Florida Department of Transportation and related local, state and federal agencies.

5. Revisions to this Handbook shall be at the discretion of the City of Marco Island City Council upon the recommendation of the City Manager with advertised notifications to the public as may be required by law.

6. The Handbook, inclusive of attached drawings, illustrations and all specified standards and specifications may be amended and supplemented in content and frequency in the best interest of the public.

7. The Handbook is intended to regulate the location, type, manner, character, adjustment and installation of all improvements and construction work performed by private parties within public right-of-way and various easements under the jurisdiction of the City.

8. It shall be unlawful for any person, entity, firm, governmental agency, corporation, association, department, authority or any other party or individual to dig, excavate, obstruct, improve, place any Facility, undertake any construction, install any materials, or perform any other work which disturbs existing structures or compaction of the soil in any right-of-way or easements provided for public use in the incorporated area of the City of Marco Island, Florida without first obtaining an authorized right-of-way construction permit for such activities from the City Manager or designee.

9. Applications for a right-of-way construction permit shall be made on authorized forms provided by the City and the content of such applications shall include, but will not be limited to, the following information:

    a. The location of the construction activities or improvements;

    b. The type of Facility to be constructed or installed;

    c. The method of construction to be used;

    d. The scheduled time for starting and completing the construction work or installation of the Facility;

    e. Minimum of two (2) sets of certified design drawings and specifications depicting and describing in detail the proposed construction activities or improvements. The design drawings and specifications shall be certified by a licensed design professional through signature and seal;

    f. Square footage of affected or impacted right-of-way or easement area(s); and

    g. Any additional information considered conventionally or traditionally applicable to the proposed construction activities or improvements, or as reasonably required by the City for completeness of a right-of-way construction permit application or because of a unique character or circumstance of the design or site conditions.

10. Applicants for right-of-way construction permits shall be held responsible to provide engineering designs and related designs that meet professional standards of practice

and review processes as designated hereinafter. Moreover, permittees shall be held responsible and liable for all standards and special conditions of the right-of-way construction permit and for all permit and administrative fees as established by the City of Marco Island City Council. Permit fees shall be of sufficient amounts to defray the City's total cost for processing right-of-way construction permits and for other associated Facility costs as may be identified with the operation, maintenance, installation or replacement of permitted construction activities or improvements.

a. The City Manager or designee shall review each right-of-way construction permit application and if deemed acceptable and approved, shall proceed forthwith to issue the permit within ten (10) business days of the date of receipt of an application. If a right-of-way construction permit application is not deemed acceptable or approved, the City shall notify the applicant stating the reasons thereof, which may include an explanation for a processing delay, permit denial or need for a required re-submittal for additional information or revisions. All notifications will be issued in writing but may include an initial verbal notification. If a notice of delay is issued such notice may state the maximum time within which the City Manager or designee shall take final action on the permit application. In the notice of delay, the request for a right-of-way construction permit shall be deemed to be denied if no action is taken by the City Manager or designee within thirty (30) calendar days of the issuance of the notice of delay. The expiration of the thirty (30) calendar day period shall thereupon serve as an official notice of denial of the application requesting a permit. During the aforementioned initial ten (10) day permit application review period or any subsequent review period thereafter, if the City's written or verbal notification includes a request for additional engineering design information or plan revisions, the re-submittal action by an applicant shall result in a restart of a new ten (10) day right-of-way construction permit application review process.

b. In the event the City Manager or designee denies the approval and issuance of a right-of-way construction permit, the applicant may appeal by filing a written notice of appeal with the City of Marco Island City Council through the City Manager with a copy to the City Clerk within ten (10) business days after receipt of the notice of denial. The applicant may then appear before City Council and present facts supporting their position. Thereafter, upon hearing the applicant's position City Council may elect to delegate authority to the City Manager to directly mediate and unilaterally decide upon the permit application dispute as an official action by the City, or the City shall deem the action or actions directly taken by City Council as a final decision on the application.

c. Right-of-way construction permits shall not be authorized or issued unless the engineering design and plans for proposed construction work or improvements conform with the most current editions of the following:

    i. State of Florida Accessibility Code.

ii. City policies, standards and specifications such as the City of Marco Island Utilities/Engineering Manual of Standards and Specifications for water, sewer and reclaimed water mains.

iii. State of Florida Department of Transportation (FDOT) Design Standards for Design, Construction, Maintenance and Utility Operations on the State Highway System.

iv. FDOT Manual on Uniform Minimum Standards for Design, Construction and Maintenance for Streets and Highways.

v. FDOT Standard Specifications for Road and Bridge Construction.

vi. Operating and maintenance policies and standards established by the City's Public Works Director.

vii. Operating standards or procedural processes established by resolution by the City of Marco Island City Council.

viii. Applicable City of Marco Island subdivision regulations.

ix. City of Marco Island Comprehensive Plan.

x. Rules and regulations by the South Florida Water Management District, the Florida Department of Environmental Protection and related state and federal agencies.

xi. Manual on Uniform Traffic Control Devices (MUTCD) latest edition, published by the U.S. Department of Transportation.

xii. Other pertinent technical literature or documents representing professional standards of practice in various design disciplines.

xiii. State of Florida Fire Code and City of Marco Island adopted amendments.

d. In the event of a conflict between two or more of the reference documents listed in above or amongst any other design documents or references, the more restrictive provision or document shall apply and remain in full force and effect. If engineering design criteria or construction standards for construction of a proposed Facility or improvement are not explicitly contained in said reference documents or if unique or special circumstances warrant, the City Manager or designee is directed to include necessary supplemental provisions or regulatory requirements as part of special permit conditions or stipulations which shall then become a formal attachment to a right-of-way construction permit. Moreover, at the discretion and sole authority of the City Manager or designee, special permit conditions or stipulations may require entry into a formal agreement to be executed by the City of Marco Island City Council and

permittee to ensure that public property such as sidewalks, bicycle facilities, traffic control devices, roadway improvements, drainage infrastructure, utilities and other Facilities are afforded the highest level of adequate protection and are modified or expanded appropriately for the safe operation and maintenance of the public right-of-way or easement. In such instances, issuance of a right-of-way construction permit shall follow execution of the formal agreement.

11. The City may in its sole and unrestricted discretion require deposit of a bond, letter of credit or other security in a monetary amount sufficient to guarantee the faithful and satisfactory performance of the proposed construction or improvement to be authorized under a right-of-way construction permit and the adequate and proper use of the public right-of-way by the permittee.

    a. All construction work and improvements performed under a right-of-way permit shall be at the expense of the permittee.

    b. The City Manager or designee is empowered with full authority to revoke or cancel an approved right-of-way construction permit in the event that actions or inactions by a permittee or representatives or agents of a permittee are determined to be in non-compliance with the standard conditions, special conditions or other stipulations of permit or if the safety, heath and welfare of the public is jeopardized pursuant to this Ordinance.

12. An Unauthorized Facility shall be deemed a public nuisance or hazard and therefore is subject to immediate removal by the permittee/responsible person as directed under the authority of the Public Works Director.

    a. When apprised of the presence of Unauthorized Facility the City shall notify (by certified mail with return receipt) the responsible person or permittee with such notification stipulating that complete removal of the Unauthorized Facility and full restoration of the right-of-way or easement shall occur immediately or within a maximum period of thirty (30) calendar days.

    b. After expiration of the thirty (30) calendar day period, the City shall cause the Unauthorized Facility to be removed and disposed of in a reasonable and responsible manner at no expense to the City but rather at the complete expense and liability of the responsible person or permittee.

    c. If deemed critical to the safety, health and welfare of the public or to protect public or private property, the City or its authorized vendor may proceed to remove the Unauthorized Facility immediately without notice to the responsible person or permittee at no expense to the City. All costs incurred by the City shall be borne by the responsible person or permittee.

    d. Upon removal of the Unauthorized Facility and after notifying the responsible person or permittee (by certified mail with return receipt), the Public Works Director or designee shall certify to the City's Financial Officer the total amount of expenses incurred by the City in removal of said Unauthorized Facility, and

thereupon such expense shall become payable by the responsible person or permittee within thirty (30) calendar days.

In the event of non-payment by the responsible person or permittee a special assessment lien and charge will be placed upon the property of the responsible person or permittee, and forthwith said expense amount shall be payable unto the City with interest at the rate of eleven (11) percent per annum from the date of such certification until paid in full. Such lien shall be in favor of the City of Marco Island and may be satisfied at anytime by payment thereof including any accrued interest. Notice of such lien may also be filed in the office of the Clerk of Circuit Court and recorded among the public records of Collier County, Florida.

If the responsible person or permittee objects to and reports that any portion of the total expense amount certified by the Public Works Director to the City's Financial Officer for removal of the Unauthorized Facility is excessive, an appeal may be pursed in any amount assessed by filing a written notice of appeal with the City of Marco Island City Council through the City Manager with a copy to the City Clerk within ten (10) business days of the date of the originating notice of appeal. The applicant may then appear before City Council and present facts supporting or her position.

Thereafter, upon hearing the applicant's position City Council may elect to delegate authority to the City Manager to directly mediate and unilaterally decide upon the expense dispute as an official action by the City, or the City shall deem the action or actions directly taken by City Council as a final decision on the application and issue of Unauthorized Facility.

13. During the execution of work for any approved Facility in the public right-of-way or easement by a permittee or by authorized representatives or agents of a permittee, the City of Marco Island shall not be held responsible or liable for the destruction of or damage to said approved Facility or to any existing Facility.

SECTION 3: PUBLIC UTILITY EXEMPTION

1. All right-of-way permitting actions by the City for proposed work and Facilities by public utility owners shall be accord with the provisions set forth in this Handbook, subject to applicable provisions of franchise agreements and Florida law.

2. Public utility owners operating under a City of Marco Island contract or franchise agreement may be exempted from the requirement for initial roadway density testing and initial roadway repairs if the construction work or improvement within City right-of-way or easement is being accomplished under an emergency situation declared by the utility owner or if a public emergency is declared by the City of Marco Island City Council or the City Manager or authorized assignee. The exempted utility companies performing construction work or improvements because of a declared emergency must obtain an after the fact right-of-way construction permit, and the activities in progress and completed work will be subject to periodic inspections and final approvals.

3. Any utility company performing work under this exemption shall remain responsible and liable for any future roadway failure, unacceptable repairs or unsatisfactory restorative activities of any City Facility attributable to performance of the original work.

4. The foregoing exemption is not applicable when the utility construction work or improvement is proposed within collector and arterial roadway right-of-way within the City limits concurrently with a City roadway or drainage/utility improvement project.

5. Upon submittal of a permit application, an annual “Blanket Permit” serving as an official right-of-way construction permit shall be issued to all publicly regulated or franchised utility companies and private utility companies operating under a City of Marco Island contract or franchise agreement along with a waiver of permit fees under any of the following conditions:

    a. Where overhead power or communication lines cross the public right-of-way and there is no physical construction in the right-of-way.

    b. For any construction in utility easements or for adding or replacing utility poles in an existing utility line, unless the easement is a combined utility/drainage easement.

    c. When underground secondary or service cables are to be installed having a length of less than 300 feet, and on roadway crossings where conduits or casings exist under the street pavement.

    d. For installing streetlights in the public right-of-way that have been requested by the City.

SECTION 4: SURVEY MONUMENTS

1. GENERAL

   a. Since many land surveying activities affect the quality and correctness of permanent public records, questionable practices by non-surveyors and damages to or destruction of land monuments during survey layout of construction features create a heritage of problems that can potentially affect legal title and rights of land ownership.

   b. To minimize or eliminate probable land boundary disputes and to simplify location of monuments and construction activities within the public right-of-way or easements of the City of Marco Island, a Land Surveyor and Mapper licensed in the State of Florida should be consulted before undertaking construction of planned improvements. Only a Land Surveyor and Mapper licensed in accordance with Florida Statutes Chapters 177 and 472, is authorized to reference monuments for replacement if destroyed or disturbed. It is emphasized that questionable practices by non-surveyors and damages to or destruction of land monuments can potentially affect legal title and associated rights of landowners including the City of Marco Island.

2. PRESERVATION

   a. Any official land survey monument set for locating or preserving the permanent lines of any public street, public easement or recorded subdivision within the City of Marco Island public right-of-way, public easement or subdivision boundary shall not be removed or disturbed without first obtaining written approval from the City Public Works Director or an authorized representative. Approval by the City for removal or disturbance of public monuments, if granted, shall carry conditions including a stipulation that the person or entity making application shall pay all expenses incidental to the proper replacement or relocation of a land survey monument by a Land Surveyor and Mapper licensed in the State of Florida. Proposed removal or disturbance of public monuments shall be processed through a standard City right-of-way construction permit.

   b. The authority for determination of permanent land survey monuments as outlined above shall be the Collier County plat books or the instrument(s) and accompanying record drawing(s) conveying ownership of the right-of-way or easement to the public as recorded in public records.

   c. This Ordinance shall in no way diminish the protection of permanent land survey monuments within the right-of-way or within easements, which are protected by State or Federal Law.

SECTION 5: REQUIREMENTS FOR RIGHT-OF-WAY PERMITS

1. Right-of-way permits are required for each proposed Facility and for any construction work that will directly or indirectly disturb any existing structure, existing Facility, existing improvement or change the state of compaction of the soil within public right-of-way or easement under the jurisdiction of the City of Marco Island.

   Moreover, it shall be unlawful for any person, entity, firm, governmental agency, corporation, association, department, authority or any other party or individual to dig, excavate, obstruct, improve, place any Facility, undertake any construction, install any materials, or perform any other work which disturbs existing structures or compaction of the soil in any right-of-way or easements provided for public use in the City of Marco Island, Florida without first obtaining an authorized right-of-way construction permit for such activities from the City's Public Works Director or assignee.

   All correspondence and communication regarding permitting procedures and processing of right-of-way construction permits shall be administered directly with and through a permittee and not contractors, subcontractors, consultants and other parties providing services to the owner within City right-of-way or easements.

   A permittee may be an authorized agent of the owner on the condition that a notarized letter signed by the owner, which confirms the agency relationship and limits of delegated authority, is submitted with an application for a right-of-way construction permit.

2. It is understood that when permitted Facilities are constructed or placed within the public right-of-way, the installation is for **permissive use only** and that such construction or placement of Facilities shall not operate to create or vest any property rights whatsoever of the associated right-of-way or easement to the permittee. Furthermore, the permittee, successors, or assigns shall be responsible to perpetually repair and maintain constructed or installed Facilities until removed from the right-of-way or easement or unless otherwise specified by the City.

3. When necessary for the planned construction, reconstruction, repair, maintenance, improvement, expansion, alteration or relocation of public right-of-way improvements as determined by the Public Works Director or an authorized representative, any or all previously permitted or non-permitted poles, wires, pipes, culverts, cables, sod, landscaping, driveways, sprinklers, and other Facilities and appurtenances shall be removed from the City's right-of-way or easement by permittee or otherwise reset or relocated thereon or on private property as required and so notified by the Public Works Director, all at the sole expense and responsibility of the permittee, or successors or assigns.

   In the event the permittee (including responsible person and owner) or a successor or an assign is notified of a need for said party to perform construction, reconstruction, repair, maintenance, improvement, expansion, alteration or relocation of previously permitted or non-permitted facilities within the right-of-way or easement and no action is

taken by the permittee or responsible party within the time frame specified by the Public Works Director or an authorized representative, then the City shall cause the previously permitted or non-permitted Facility or work to be altered, relocated, or removed as deemed necessary for public health, safety and welfare and the total expense incurred by the City for such actions as a result of the failure of the permittee to act shall be borne by the permittee or the responsible party.

4. Right-of-way permits shall include a listing of the planned date of commencement of work by a permittee, the number of calendar days scheduled for the work or Facility, and the scheduled date of completion. The permit will expire thirty (30) days after the designated completion date unless authorized for longer periods.

5. All Facilities proposed to be installed or worked upon within public right-of-way or easement shall require a right-of-way construction permit unless waived or otherwise determined not necessary by the Public Works Director or an authorized representative. By way of example only the following activities are representative of work and Facilities that require a right-of-way permit, including, but not limited to:

    a. Sidewalks/bikeways or access paths;

    b. Sprinkler systems;

    c. Landscaping installations and tree pruning;

    d. Road building, swale grading and pavement markings;

    e. Driveways and access roads;

    f. Sanitary sewers, force mains, waterlines, storm sewers;

    g. For all underground installations and roadway crossings;

    h. All wire lines crossing the right-of-way including service to those originating poles outside the right-of-way;

    i. For all permanent wire service drops when it is necessary to place a pole on the right-of-way on the opposite side of the road where there is not an existing and previously approved pole line; when it is necessary to place a pole adjacent to a buried cable where the pole has not been previously approved; when it is necessary to place a pole beyond the limits of an existing approved pole line;

    j. For all aboveground Facilities placed in connection with underground installations when not included in the original permit;

    k. For the installation of sod in the right-of-way (See Section 13, Sod Placement);

l. For the installation of a private or area street light on an existing pole within the right-of-way where the lighting pattern is to be directed toward the pavement;

m. If a new pole is to be set in the right-of-way to accommodate a private or area street light, regardless of the direction of the lighting pattern;

n. Where existing Facilities are to be relocated within the right-of-way;

o. Installation of any type of supportive posts or traffic devices or signs of any type within the right-of-way;

p. For access roads / driveways, a City right-of-way construction permit is also required when the proposed construction affects a City drainage facility or any other Facility; and

q. For a replacement of deteriorated poles in an existing, approved pole line in the right-of-way.

r. For the installation of any traffic calming devices.

6. Subject to review and approval by the City on a case by case basis, the following are a few examples which typically would not require a permit:

a. For minor repairs of a pedestal or pole provided the pedestal or pole occupies the right-of-way by virtue of an approved permit, and provided that no damage is caused to the right-of-way or easement by the servicing vehicles.

b. For routine maintenance of a permitted Facility.

c. For an overhead pole-to-pole, service drop when the poles occupy the right-of-way by virtue of an approved permit and minimum overhead clearance is maintained.

d. For a temporary service wire placed across or adjacent to the roadway, that does not create a hazard for the traveling public.

e. When the work is to be done in or on private property, providing construction will not be accomplished within a City dedicated utility/ drainage easement or public right-of-way.

f. To run a drop from the tapped pedestal, directly to a private property line, so long as the portion of the cable drop is buried in the right-of-way or easement and is no longer than the total width of the easement. Example: From a pedestal located in the middle of a ten (10) foot easement, a drop can be run directly to an abutting property line without a right-of-way construction permit so long as that drop runs no longer than ten (10) feet in the easement.

g. For locating existing utility or power lines and valves for proposed construction to be subject to a future application for a right-of-way construction, permit.

h. For hydrant and valve adjustments.

i. For residential water or gas meter installations where the meter and main are located on the same side of the street.

7. Violation of permitting requirements: Upon violation of any requirements, stipulations, standard conditions, or special conditions of a right-of-way construction permit, the City Manager or designee may:

   a. Void the approved right-of-way construction permit.

   b. Engage administrative restraints including work stoppages until the violation has been corrected.

   c. Take steps to fulfill the permit requirements, additional stipulations, or corrective work actions.

   d. Invoice the offending permittee or responsible person for costs incurred.

   e. Inform the City Attorney that a violation this ordinance has taken place and accordingly take any other actions permitted by law.

   f. Initiate any enforcement methods provided in Chapter 14 of the Code of Ordinances, City of Marco Island.

8. The applicant shall be responsible for providing written notification of proposed work and improvements to all utility owners in the immediate vicinity of the proposed work, including the City of Marco Island utility personnel. It is the applicant's responsibility to coordinate its work with any utility betterment work or relocation work that may be underway or proposed by utility owners as necessary.

SECTION 6: PERMIT INSTRUCTIONS

1. A right-of-way construction permit must be reviewed, approved and authorized by the Public Works Director or his designee before undertaking construction work, landscaping or improvements and prior to commencement of work on any Facility within public right-of-way or easements, except as may be permissible pursuant to this Handbook. All communication and correspondence regarding construction procedures and permit processing will be handled directly with the permittee or authorized agent. Permittee is defined as the owner of the proposed Facility, construction work or improvements and shall not mean or include contractors, subcontractors, consultants or any other parties providing services to the owner within City right-of-way or easements unless a notarized letter signed by the owner, which confirms the agency relationship and limits of delegated authority, is submitted with an application for a right-of-way construction permit.

Right-of-Way Construction Permit Application

a. The applicant shall submit a complete permit application form (which may be titled either “Public Right-of-Way”, “Public Utilities Franchise”, “Public Utilities” Permit, or any other similar designation) to the Public Works Department for review and processing. The Public Works Director or an authorized representative will approve acceptable permit applications by signature or stamp impression resulting in issuance of a right-of-way construction permit upon payment of all fees by the applicant.

b. Two (2) sets of signed and sealed final design drawings drawn to scale along with associated documents (i.e., specifications, cost estimates, non-City permits) shall accompany the permit application with such final drawings accurately reflecting in detail the proposed Facility or construction.

c. The applicant shall provide a list of all landscape plant materials, including the genus, species of the plants and a diagram of the landscape design.

d. The permit drawings shall show the offset from the centerline of the existing roadway or alley to the proposed construction installation, the right-of-way and easement lines, pavement width, distance from edge of pavement to facilities and all related information to clearly and fully depict the design. Moreover, the drawings and associated documents must show all information and features of construction such as materials to be used, pipe size, conduit size and standard and specialty details.

e. If a pipe is to be installed by jacking and boring or directional bore methods, it shall be clearly and fully described as such on the design drawings with indicated design length, size and depth. One or more typical cross-sections, as may be required to adequately reflect the location of the proposed Facility and existing Facilities owned by other right-of-way users, shall be shown on the permit drawings.

f. Preparation and content of design drawings submitted by permittees shall generally follow FDOT standards (i.e., Plans Preparation Manual) and other standards of professional practice attendant to various design disciplines to ensure that proposed Facilities and construction features are clearly and fully depicted in the permit drawings to represent a quality design for ease of review by the City.

g. Existing underground Facilities shall be shown for proposed overhead installations where new poles are to be installed and conversely existing overhead Facilities shall be shown where underground work is proposed.

h. Additional information such as the location of road intersections, median openings, bridges, utilities, railroad crossings and other physical features shall be indicated on the design drawings as necessary to effectively correlate proposed work with existing site conditions and to avoid conflicts between existing and proposed Facilities.

i. To minimize problems during construction and protect the interest of public heath, safety and welfare, the applicant for each pending right-of-way construction permit shall be responsible to issue written notifications to all affected utility owners within and adjacent to the limits of construction or in the immediate vicinity of the proposed Facility, construction work or improvement.

j. Upon request by the City, the following additional information shall be submitted to the Public Works Department if the proposed construction work, Facility or improvement involves the alteration of an existing public drainage system or feature:

    i. Pertinent drainage calculations and complete design plans and specifications shall be submitted. A licensed professional engineer shall certify all such information by signature and seal.

    ii. A general note shall be included in the final design drawings submitted for a right-of-way construction permit stating that:

    “Upon completion of construction of all drainage improvements shown in these plans, the permittee shall provide the City with a written certification signed and sealed by a Florida registered Professional Engineer attesting that the storm drainage improvements have been constructed in conformance with the approved plans, approved specifications and governing City regulations.”

Permit Processing

k. Each right-of-way construction permit application shall be submitted to the Public Works Department for formal review and commenting. Permit applications shall be processed in the following manner:

    i. The completed application shall be submitted to the Public Works Department for review and approval or denial.

    ii. All required plan revisions will necessitate re-submittal of two sets of amended drawings showing the right-of-way construction permit number along with appropriate notations in the title block and "clouding" of areas on the design details of each sheet clearly and completely describing the specific revisions.

    iii. Upon approval, the original right-of-way construction permit will be retained for permanent record by the Public Works Department with a copy of the original permit being provided to the applicant/permittee.

    iv. If the permit is denied, the applicant will be notified as set forth this ordinance.

Permit Inspections

l. Inspections are required by the City for the following items:

    i. Any concrete structure or Facility to be erected, constructed or cast on site requires a City inspection of the fabrication forms, form bracing and reinforcing bars prior to pouring of any concrete.

    ii. Open cutting of roadways (pavement surfaces).

    iii. Driveway entrance construction.

    iv. Stake out of survey markers showing proposed final swale flow line elevations / grades for construction.

    v. Final grading work accomplished for swales. For storm drainage improvements, the requirements contained in Sections 12 and 13 are applicable.

    vi. Landscape installation and design.

    vii. City inspections are for the purpose of correcting errors or unacceptable work observed at the time of each inspection, and do not constitute partial or final acceptance for maintenance by the City

or do the inspections release the permittee from liability if a failure occurs in the future.

viii. All work performed within the right-of-way and easements requires a final City inspection for approval of the work, which shall include an acceptability review of site restoration activities within the limits of construction and all other areas disturbed during construction. The permittee must then pay any outstanding fees and receive a Certificate of Completion to officially close out of the right-of-way construction permit.

SECTION 7: STANDARD REQUIREMENTS FOR THE WORK

1. Standard Permit Requirements: Standard right-of-way permitting requirements by the City of Marco Island are set forth below and shall be implemented and administered by its Public Works Department.

   A primary objective in the design, construction and relocation of a private or public Facility is preserving the physical condition and integrity of existing right-of-way improvements and the health, safety and welfare of the public and construction workers. Additionally, in all cases full consideration shall be given to sound engineering principles and economic life cycle factors.

   a. Minimum technical requirements: Right-of-way construction permits shall not be authorized or issued unless the engineering designs and plans for a proposed Facility, construction work or other improvements conform with the most current editions of the following:

      i. State of Florida Accessibility Code.

      ii. City policies, standards and specifications such as the City of Marco Island Utilities/Engineering Manual of Standards and Specifications for water, sewer and reclaimed water mains.

      iii. State of Florida Department of Transportation (FDOT) Design Standards for Design, Construction, Maintenance and Utility Operations on the State Highway System.

      iv. FDOT Manual on Uniform Minimum Standards for Design, Construction and Maintenance for Streets and Highways.

      v. FDOT Standard Specifications for Road and Bridge Construction.

      vi. Operating and maintenance policies and standards established by the City's Public Works Director.

      vii. Operating standards or procedural processes established by resolution by the City of Marco Island City Council.

      viii. Applicable City of Marco Island subdivision regulations.

      ix. City of Marco Island Comprehensive Plan.

      x. Rules and regulations by the South Florida Water Management District, the Florida Department of Environmental Protection and related state and federal agencies.

xi. Manual on Uniform Traffic Control Devices (MUTCD) latest edition, published by the U.S. Department of Transportation.

xii. The State of Florida Fire Code and the City of Marco Island adopted amendments.

xiii. Other pertinent technical literature or documents representing professional standards of practice in various design disciplines.

b. At locations where the City's traffic control and safety devices will interfere with proposed construction of a Facility, the permittee or its authorized agent(s) will notify the City's Public Works Department at least seventy two (72) hours in advance of site mobilization and commencement of construction. All such interfering devices will be removed or relocated by the permittee only upon approval and under the supervision of the City's Public Works Department. Any traffic control or safety device damaged or destroyed will be replaced by and at the expense of the permittee.

c. For construction activities involving installation of overhead power or communication Facilities, a minimum clearance shall be maintained as required by the National Electric Safety Code, latest edition, or as specified by the City. In general, one side of the right-of-way is usually reserved for communication lines while the other side is reserved for power lines. In the event that more than one aerial installation is proposed on the same side of the roadway, a joint-use arrangement may be required by the City along with formal executed agreements between the utility owners and possibly the City as applicable.

i. Only one aerial pole line will be permitted on each side of the right-of-way. However, a second pole line to support roadway illumination may be authorized where a justifying public purpose and need is properly documented and if appropriate traffic control requirements are implemented.

ii. Unless otherwise approved for unique circumstances or under a petition of justifiable hardship, all utility poles and appurtenances shall be completely installed within a two-foot wide corridor inside the right-of-way or easement with the position of the outside face of a typical pole or appurtenance not exceeding a distance of two feet away from the right-of-way or easement lines.

iii. For existing roadways and alleys which are planned for reconstruction, or which can be expected to receive future curb and gutter installations, placement of utility poles and appurtenances shall not interfere with such roadway improvement planning or design activities.

iv. When base mounted utility or light poles are used, the bases must be installed flush with or below the final design ground surface. It may be

necessary for the City to restrict or disapprove this type of installation for safety reasons, for circumstances that result in physical conflicts and for situations where the pole bases are unusually large and excessively consume limited right-of-way or easement areas.

v. Unless otherwise approved for unique circumstances or under a petition of justifiable hardship, all longitudinal underground utility Facilities (including potable water mains and sanitary sewer lines) shall be placed outside of roadway and alley pavement and shoulders areas. The burial depth of utility Facilities shall have a minimum total cover of thirty (30) inches; primary cables (i.e., voltages exceeding 500 volts) shall have a minimum total cover of thirty-six (36) inches; and, secondary cables (i.e., voltages less than 500 volts) shall have a minimum total cover of thirty (30) inches.

d. Where encasement is used and designed as a pressure vessel, the encased pipe shall have a strength equal to or exceeding the carrier pipe; and, where the casing is not a pressure vessel the encased pipe shall be capable of supporting external loads of a minimum of 2,200 pounds per square foot at a depth of thirty (30) inches below final design ground surface.

e. Gas and liquid petroleum pipelines shall be designed and constructed in conformance with the latest edition of 49 CFR, Part 192, Transportation of Natural Gas by Pipeline or Part 195, Transportation of Liquids by Pipeline.

f. When a technical or economic emergency or hazardous condition warrants immediate action, such as a leak or failure in a gas, cable, sewer or water line or in a situation that adversely impacts public health, safety or welfare the City may initially waive the requirement for utility owners to obtain a right-of-way construction permit prior to commencement of the work. The City's waiver authorization may initially be by verbal notice, but will be followed by a written notice.

In these emergency situations, the City Public Works Department shall be notified immediately by phone or in writing. Within seventy-two (72) hours of occurrence of the emergency incident, an after-the-fact application for a right-of-way construction permit for the work performed or in progress shall be submitted to the City Public Works Department for processing and approval. The emergency based activities in progress and completed work will be subject to periodic inspections and final approvals for close out of the right-of-way permit function.

g. Landscaping other than sodding will be permitted in City right-of-way and easements if the landscaping designs meet the criteria in the latest edition of the City's Landscaping Guidelines and Policies set forth in Appendix A.

h. Proposed installation of fences or walls which enclose public property or which result in the use of public property for private purposes will not be approved within right-of-way and easements. Prior to permit issuance or prior to the installation of

approved fences or walls within any utility or drainage easement, the permittee shall provide the City with a copy of a written approval from all appropriate owners that have an interest or legal right in said easements. After installation of the fences or walls, the permittee shall assume responsibility for perpetual maintenance and for any future removal or replacement thereof.

i. Mailboxes, prior to installation and placement, shall meet the minimum requirements of the United States Postal Service and all safety and other requirements specified by the Public Works Department.

j. Utility owners shall utilize existing utility easements for utility improvements whenever technically feasible and in the best interest of public health, safety and welfare prior to petitioning the City for placement within right-of-way.

k. The construction and maintenance of each permitted Facility shall not interfere with the property rights of abutting landowners or the rights of other permittees.

l. In consideration that multiple governmental agencies may have permitting jurisdiction within the City of Marco Island, all construction and maintenance of permitted Facilities shall be in accordance with standards acceptable to the City, Collier County and the State of Florida Department of Transportation as applicable with oversight supervision by the City's Public Works Department.

m. All materials to be permanently incorporated into the work as part of a permitted Facility shall be subject to inspection and approval by the City's Public Works Department.

n. During construction, all applicable safety regulations shall be observed and the City shall be relieved of all responsibility for damage or liability of damage of any nature arising from work authorized under this permit.

o. For the proposed work, indemnification requirements (Public Liability insurance, Property Damage insurance, Workman's Compensation insurance) shall be specified to protect the City of Marco Island. A copy of the Certificate of Insurance shall be submitted to the City of Marco Island Public Works Department prior to the start of construction within the public right-of-way.

p. Subject to same terms and conditions, holder must take such safety measures, including placing and displaying caution, warning lights, and barricades in conformance with the latest revisions of the Manual on Uniform Traffic Control Devices for Streets and Highways (MUTCD) and the State of Florida Manual of Traffic Control and Safe Practices of Street and Highway Construction, Maintenance and Utility Operations.

q. All City property shall be restored equal to or better than its original condition, or to the satisfaction of the City Public Works Department.

r. It shall be the permittee's responsibility to locate and protect from damage all existing utilities both aerial and underground.

s. The permittee shall obtain necessary rights-of–entry for construction and maintenance when required right-of-way for public use has not been dedicated and accepted by City of Marco Island.

2. Requirements for Crossings:

a. The preferred methods for crossings under pavement or other roadway facilities are jacking/boring and directional boring. Jacking and boring operations and directional boring operations shall comply with FDOT Standards Specifications. (See FDOT Section 555-Directional Boring, and FDOT Section 556-Jack and Bore) The permittee shall be responsible for the appropriateness and success of the methods and standards used. Open cutting of existing pavement shall only be authorized when directional boring and jacking/boring methods are not feasible. Open cutting pavement operations when authorized by the City shall be in accordance with FDOT Standard Index No. 307, Utility Cut. (Other FDOT Indexes, such as Index No. 505 Embankment Utilization, may apply) No underground crossing operation shall begin until the City's inspector is on-site and agrees that all proper preparations have been made. The right-of-way construction permit will generally stipulate whether a City inspector is required on-site during the crossing operation. The permittee shall be responsible for all damages to the City's roadway system.

b. A pneumatic underground piercing tool (Hole-Hog) is also an acceptable device for use under roadways in areas approved by the City Public Works Director or an authorized representative. Unless a design exception is authorized by the City for justified reasons to be documented by the permittee, crossings under existing pavement shall be made using jacking and boring or directional bore methods without open cutting pavement.

c. Sewer force main, gas and waterlines require ductile iron pipe if placed in an open cut of a roadway, unless otherwise approved. If a PVC pipe is to be used in lieu of ductile iron pipe, the PVC pipe shall meet the design criteria of AWWA C900 or approved equal. The design criteria for other PVC pipe usage shall be reviewed on an individual basis.

d. Jetting, (air or water) or tunneling will not be allowed.

e. Jack and Bore: A minimum of four (4) inch pipe may be jacked and bored under a roadway, at a minimum depth of twenty-four (24) inches, measured from the top of the pipe to the road edge. If mechanical boring is utilized to place the pipe, the tip of the drill head shall not precede the end of the pipe by more than two (2) inches. All jack and bore crossings will be a continuous

operation at the approved location and depth unless otherwise approved. Any deviation from the above will be sufficient grounds for work stoppage, plugging the line with concrete and replacement of a line at the proper location. Casing will be required for crossing under existing pavement where the carrier is of composition such that it cannot be jacked and bored. All voids in a casing when used shall be sand filled or grouted.

f. Pushing a Pipe: A maximum three (3) inch pipe may be pushed under a roadway upon approval by the City Public Works Department. A pipe shall be pushed at a minimum depth of thirty (30) inches, measured from the top of the pipe to the road edge. Exceptions will be considered for a driveway crossing. For the installation of sprinkler lines in the right-of-way, see Section VIII, Pages 1 & 2. Any request for exception to the foregoing requirements must be fully justified in writing by the applicant.

3. <u>Road Pavement:</u>

a. Road Pavement Cutting: Open cutting of existing pavement will generally not be allowed, but may be considered under one or more of the following conditions.

i. Subsurface obstructions including rock.

ii. Extreme high water table.

iii. Limited space for jack and bore pits.

iv. Condition of roadway surface – including imminent resurfacing and rebuilding, provided inspection and approval beforehand is made by the City Public Works Department.

v. Extreme economic hardship is proven with adequate supportive data.

b. Where an open cut has been permitted, replacement of backfill, base and wearing surface shall be in accordance with Section XIV “Drawings and Illustrations” of this Handbook and / or special stipulations of the permit.

i. Lime rock will be on the jobsite during open cutting.

ii. If the restoration is incomplete at the end of the day, the trench shall be backfilled and made flush with existing pavement edges.

iii. Before lane is open to traffic, an asphalt patch must be provided where applicable. In lieu of the asphalt patch, the use of flowable-fill within ¾ inch of the top of the asphalt layer may be permitted.

iv. Upon backfill and completion of the base, if the hot mix asphalt is not immediately placed and when authorized, a temporary cold or hot mix asphaltic patch with a smooth all-weather surface may be utilized.

v. The permittee assumes all maintenance/repair responsibilities and liability for the installation.

4. Attachments to Structures (Bridges, Culverts, Etc.):

a. Attachments to structures in the right-of-way will be generally discouraged but may be considered under one or more of the following conditions:

i. An extreme hardship as determined by the Public Works Director.

ii. Attachment will not create a potential hazard to the public.

iii. Attachment will not affect the integrity of the structure (structural analysis by the Applicant may be required to be submitted as part of the permit application.)

iv. Attachment will not adversely affect the aesthetics of the structure.

v. Attachment will not hinder City maintenance operations.

b. Criteria: Where attachments are permitted by the City Public Works Department the following criteria must be adhered to:

i. All maintenance of attached structures must be made without hazard to the public and in accordance with all applicable safety standards.

ii. Existing clearances (overhead, lateral and vertical) shall not be reduced.

iii. Where feasible, facilities should be in casings so that the maintenance can be accomplished from ends of structures.

iv. Material used for casing and attachments should be such that it will require minimum maintenance. This will include ductile iron, galvanized steel, stainless steel, aluminum, concrete, etc.

v. Where a permit involves the attachment of a volatile fuel line to a structure, the applicant shall submit a letter of explanation as to why such attachment is required.

vi. All lines carrying hazardous transmittants must be encased throughout the length of the structure with shutoff valves within a

distance specified by the City Public Works Department. The casing must be designed to contain the transmittants on the structures and be vented at each end of the structure.

vii. The attachment shall be installed so as to induce corrosion into the structure or lessen its structural integrity.

viii. If other locations are reasonable, attachment to the structure will not be allowed.

ix. Appropriate fan guards, fences, signs shall be placed as necessary.

5. <u>Safety Requirements:</u>

a. Unless an approved detour is provided, at any open cut crossings, minimum of one-way traffic will be maintained during the daylight hours and two-way traffic at night. All traffic detours will be restricted to the limits of the City right- of-way with necessary flagmen or marking devices. These detours shall be approved by the Public Works Department with prior notification to the Police and Fire Departments. Detour of traffic outside of the City right-of-way will be considered with the approval of local governmental agencies and private concerns involved.

i. During construction, all necessary signs, flagmen, and other safety devices shall be utilized.

ii. All work shall be performed with the requirements set forth by the Occupational Safety Health Administration.

b. Prior to implementing a proposed temporary street closing, a detour plan in conformance with the MUTCD manual shall be submitted for review / approval by the City Public Works Department. Depending on the proposed scope of work involving disruption of access, closure of motor vehicle travel lanes or interference with pedestrian and bicycle movements, the City may require that a detour plan be signed and sealed by a qualified registered professional engineer. Further, the permittee is responsible for insuring that each construction employee supervising the selection and placement of maintenance of traffic control devices in work zones be properly trained and certified by attending and successfully completing an FDOT or equivalent approved maintenance of traffic training course. The permittee shall have a properly trained certified employee for the applicable level of maintenance of traffic work on site during the initial set-up and when any changes to the traffic control/detour plan are required. The permittee's certified maintenance of traffic employee shall be available at the work site within 45 minutes of the permittee being notified by the City that problems exist. The required detour plan shall contain the following notes:

i. This plan is for temporary street closings only, at such times when closing the street is unavoidable.

ii. Provide the City of Marco Island forty- eight (48) hours notice of intended closing (Public Works, Police, Fire).

iii. Warning and detour signs indicated may be installed on sign posts or movable supports. If signposts are used, the contractor shall cause underground utilities to be located and shall protect same from damage by post.

iv. If posts are used, signs shall be removed promptly from posts when street is re-opened. Posts shall be removed when no more street closings are anticipated.

v. Signs shall not be placed where they interfere with view of any other traffic signs, or in any other location where they create a hazard.

vi. On the day of use, signs shall be set out in the following order: Street Closing Ahead; Detour Ahead; Road Closed with barricade.

vii. When street is re-opened, signs shall be removed in reverse order from above. The Police and Fire Departments shall be notified of the re-opening.

viii. Flaggers shall be stationed at barricades at each end of closed block, to direct and control authorized entry. Flaggers shall be present at all times when street is closed.

ix. Street shall be cleaned up before re-opening.

x. Where the word “street” is shown on any sign depicted on this plan, the word “road” may be substituted, depending on availability of signs.

xi. All traffic control devices and procedures shall be in accordance with the Manual on Uniform Traffic Control Devices and specific directives issued by the City’s Public Works Department or Police Department.

6. Regulations Concerning Excavation Sites:

a. In addition to complying with regulations and laws legislated prescribed by local, state and federal jurisdictions that govern construction excavations, trench safety and environmental protection, each permittee shall be subject to the regulations set forth below for site excavation activities within the City’s right-of-way and easements. Such requirements shall include, but not be limited to, the following measures:

i. Protection of the excavation site or trench: When directed by the City each permittee shall cover open excavation areas with non-skid steel plates ramped to the elevation of the contiguous street, pavement, or other public right-of-way. Otherwise, each permittee shall cover open excavation areas in accordance with alternate City requirements and directives.

ii. Housekeeping and removal of excavated material: Each permittee shall keep the area surrounding the excavation clean and free of loose dirt or other debris in a manner deemed satisfactory to the City. Excavation sites shall be cleaned at the completion of each workday. In addition, the permittee shall remove all excavated material from the site of the excavation no later than the end of each workday.

iii. Storage of materials and equipment: Materials and equipment that are to be used for the excavation within seven (7) calendar days may be stored at the site of the excavation, except that fill material, sand, aggregate, and asphalt-coated material may be stored at the site only if it is stored in covered and locked containers.

iv. Hazardous material: Each permittee shall be subject to hazardous material regulations for data collection, disposal, handling, release, and treatment of hazardous material; site remediation; and worker safety and training. Permittees shall comply with all federal, state, and local laws regarding hazardous material.

7. <u>Regulations For Street Closures and Maintenance of Traffic:</u>

a. It is the policy of the City to require permittees to construct roadway improvements and related Facilities within public right-of-way and easements in the safest and most expeditious manner resulting in the least impact to motorists, pedestrians, and other users of City property.

b. A City review and approval process for right-of-way construction permits involving temporary lane closures and related closures of access points will assure appropriate controls for accomplishment of improvements and Facilities in the best interest of public health, safety and welfare with an incentive to permittees to expeditiously complete the work.

c. Safety concerns shall be addressed by a Professional Engineer through the submittal of certified Traffic Control Plans (TCP) that complies with the MUTCD & FDOT Standards. The incentive to permittees is addressed by providing a fixed time period for performance of roadway construction activities that disrupt lane travel to avoid payment of a road closure fee. The road closure fee, as prescribed under City Code, is based on the approximate delay cost for the

daily volume of traffic utilizing the applicable street along with administrative costs.

d. The certified TCP shall conform to the MUTCD and shall be prepared to maintain acceptable traffic circulation. Each permittee shall ensure that the final TCP is maintained at all times of operations within the public right-of-way and shall include appropriate advance signing and appropriate traffic control personnel.

e. The policy for road closures, and days and hours of operation are as follows (Note: City Manager approval is required for after-hours work):

    i. Days of Week: Short-term activities without lane closures can be scheduled Monday through Friday subject to identification and mitigation of peak hour traffic controls and subject to applicable management approvals per the City Code. For short-term activities (less than 6 hours) involving lane closures/detours, work shall be scheduled off-peak and remain subject to appropriate approvals. For long-term activities (greater than 6 hours) involving lane closures/detours, work shall be scheduled off-peak to the greatest degree possible with appropriate approvals.

    ii. Hours of road closures/detours: Normal work hours shall be from 7:00 a.m. through 5:00 p.m. Monday through Friday, except for work in the medians and for construction of turn lanes. Median and turn lane construction shall be confined to “off peak” traffic hours and “off-peak” traffic days. Off-peak periods for the purposes of this policy shall be 7:30 PM thru 6:30 AM. Work during these periods shall be subject of right-of-way construction permit reviews, TCP designs, City Manager approval, approvals from other City personnel and abutting property owners if applicable. Road or lane closures/detours during the business day shall not be allowed except wherein the safety, welfare and delay of the public warrant such approvals.

    iii. All fees shall be paid prior to the project being issued a Certificate of Completion or Certificate of Occupancy.

SECTION 8: SPECIAL REQUIREMENTS FOR RESTORATION OF RIGHT-OF-WAY AND MAINTENANCE OF FACILITIES

1. All City of Marco Island public property shall be restored to its former or original condition in accordance with the Florida Department of Transportation Standard Specifications for Road and Bridge Construction, latest edition, and/or the City of Marco Island Land Development Code, latest edition, and in a manner satisfactory to the City Public Works Department.

2. Restoration Requirements:

    a. All excavated material in excess of the quantity required for backfill in the City right-of-way, shall be removed by the Permittee, at their cost, and expense. All unusable material shall be disposed of at the Permittee's expense and not placed within the limits of the City right-of-way unless so directed by the City Public Works Department.

    b. Anyone who performs work within the public right-of-way shall be responsible to protect, during construction, all existing vegetation and facilities (i.e. Fire hydrants, standpipes and safety devices) not authorized to be removed on the permit. It shall be the Permittee's responsibility to have all construction debris removed from the Public right-of-way and to restore all vegetation or facilities damaged during construction.

    c. Grassing, mulching, and watering operations when required are to begin within three (3) weeks after completion of construction, or as otherwise directed and shall be continually watered until growth is initiated or until sufficient local shower activity will ensure growth. All requirements regarding grassing, mulching and watering shall be in accordance with the Florida Department of Transportation Standard Specifications for Road and Bridge Construction, latest revision or as otherwise stipulated. Any yards or parts of right-of-way in front of private property that contain a grass mat shall be re-sodded with similar type sod or other approved groundcover plant species and arrangements shall be made for watering of such sod or groundcover to establish growth.

    d. The indiscriminate cutting of trees or disfiguring of any feature of scenic value shall not be permitted. This includes other methods such as the use of herbicides. The necessary trimming or cutting of trees by the Permittee in the interest of public safety or continuity of facility service shall not be considered indiscriminate where such facilities cannot bypass the obstruction without violating the minimum clearance requirements.

    e. All side drains, side ditches, swales, and storm sewers will be referenced as to grade and location prior to construction and maintained during construction.

f. Drawings are included in Section 17, which show proper road replacement when an open cut is allowed. In some instances, additional paving may be required.

g. Temporary asphaltic patches are permitted when restoration of the road is incomplete at the end of the day and only with the approval of the Public Works Department. If special approval is given for a temporary patch, the cut shall be properly backfilled with compaction meeting the density requirements specified, primed, and then the cold or hot mix asphaltic patch applied. At such time when the conditions are corrected, the temporary cold or hot mix asphaltic patch used shall then be removed and the final asphaltic overlay shall be evenly applied, as required. The temporary patch may be utilized for a period from the commencement of the open cut not to exceed thirty (30) days for each cut.

h. Limerock Bearing Ratio (L.B.R.) testing proctors on the proposed backfill material and density testing shall be conducted by a certified laboratory. All testing shall be completed and shall meet minimum density requirements on each lift prior to additional backfilling. Copies of the L.B.R., proctor and all completed compaction test results shall be furnished to the City of Marco Island Public Works Department.

i. When the specified compacted lime rock base is greater than six (6) inches, the base shall be constructed in two or more lifts.

j. The lime rock used for backfilling shall come from a Florida Department of Transportation approved pit.

k. Where crossings are made through driveways, sidewalks or parking lots within Public right-of-way or dedicated easements, restoration shall be equal to or exceed the existing design criteria in both material and workmanship.

l. If deemed by the City Public Works Department the Permittee shall repair the cut by any means that will result in a road surface of Type II hot mix asphalt that will remain flush with the undisturbed adjacent road surface for a period of one (1) year without any further attention.

m. If at any time within one year of any work on the cut repair the Permittee is notified by the City Public Works Department that the patch has degraded to the point where further repair is required, the Permittee shall have such work done within the time limit specified by the City Public Works Department. When the work is completed, the one-year guarantee period will start again.

n. If the permittee anticipates settlement of the repair for any reason, they may initially install a temporary cold patch. In this case, the one-year guarantee period shall start when the cold patch is replaced with Type II hot mix asphalt.

o. If repair work, satisfactory to the City Public Works Department, is not done within a reasonable length of time after receipt of written notification that the patch is not performing adequately, the City may undertake the repairs and invoice the Permittee for the work done and administrative cost. Such action by the City shall not absolve the Permittee from their responsibility for the repair for one year.

SECTION 9: STREET/ALLEY MATERIALS & CONSTRUCTION

1. Stabilized Subgrade: Sub grade material shall conform to Section 160 and 911 of FDOT Standard Specifications, latest edition. Stabilization of the sub grade and shoulders shall be in accordance with Section 160 of FDOT Standard Specification. The sub grade and shoulders shall be stabilized to a depth of twelve (12) inches and to the width as shown on the plans and shall have a minimum Florida Bearing Value (F.B.V.) of fifty (50) or a minimum Lime rock Bearing (L.B.R.) of forty (40). The sub grade and shoulders shall be compacted to at least ninety-eight (98) % of maximum density as determined by AASHTO T-180.

2. Limerock Base: The limerock base materials shall conform to Section 911 of the FDOT Standard Specifications, latest edition. Construction of the base course shall be in accordance with Section 200 and 210 of FDOT Standard Specifications. The base course shall have a compacted thickness and width as shown on the Drawings. Compaction of the base course shall be at lease ninety-eight (98) % of the maximum density as determined by AASHTO T-180.

3. Prime Coat: The base shall be primed in accordance with Section 300 of FDOT Standard Specifications, latest edition. The base surface shall be cleaned until free of objectionable foreign material. When the prime is applied adjacent to curb and gutter or any other concrete surface, such surface shall be protected by means of heavy paper or other approved material. The base shall be primed with Grade SS-I bituminous material, or equal approved by the Public Works Department at the rate of not less than 0.1 gallons per square yard and not more than 0.2 gallons per square yard.

4. Wearing Surface: The wearing surface on roads, commercial driveways, and bike paths shall be asphaltic concrete of the type, compacted thickness and width to comply with Sections 320, 330 and 332 of FDOT Standard Specifications unless otherwise shown. The Contractor shall furnish sufficient proof that the named source of material supply to be used meets the FDOT Road Specifications. The City Engineering Department may require additional tests from time to time and the contractor shall furnish all material necessary for said test.

5. Concrete Gutter, Curb Elements and Traffic Separator: Materials and construction of concrete gutters, curb elements and traffic separators shall meet the requirements of Sections 520, 345, 415, 932, 921, 901, 902, 923 and 924 of the FDOT Standard Specifications.

6. Testing and Inspection:

    a. Inspection: During construction, the City Inspector shall make a field inspection of each phase. It is the contractor's responsibility to notify the Public Works Department when a phase of construction is ready for inspection.

    b. Wearing Surface: The contractor shall furnish and bear the cost of holes to make spot check thickness measurements of compacted wearing surface. The

depth of each layer shall be checked at intervals, not to exceed two hundred (200) feet. Any deviation from the required thickness shall be immediately corrected.

c. Limerock Base: The contractor shall provide and bear the cost for tests of lime rock base. If the first attempt of any tests or inspections fails, the contractor will pay for all additional tests as required by specifications. One in-place density test for each 0-1000 square yards of lime rock base and one test for each additional 1000 square yards (AASHTO T-180) shall be provided.

d. Stabilized Subgrade: The contractor shall provide and bear the costs for tests and approvals of stabilized subgrade. If the first attempt of any tests or inspection fails, the contractor will pay for all additional tests and inspections as required by the specifications. One Florida Bearing Value Test or Lime rock Bearing Ratio Test for each 0-1000 square yards of stabilized subgrade and one FBV (or LBR) test for each additional 1000 square yards shall be provided. In addition, one in-place density test for each 1-1000 square yards of stabilized subgrade and one test for each additional 1000 square yards (AASHTO T-180) shall be provided.

SECTION 10: DRIVEWAY / ACCESS ROAD REQUIREMENTS

1. The regulation and control of driveway connections to a public right-of-way or easement is necessary to provide for the efficient and safe operation of the roadway, develop the full potential of the roadway investments, and for the protection of the recognized access rights of property owners fronting City roads.

   The purpose of these regulations is to regulate and control the location, design, construction, and operation of driveways to satisfy to the fullest extent possible the rights and needs of both the road users and the adjacent property owner.

2. The permittee must take safety measures, including placing and displaying caution, warning lights, and barricades, as necessary, to safely conduct the construction and maintenance work.

   The City shall be relieved of all responsibility from damage or liability of damage of any nature arising from work authorized by the permit.

3. All access driveways for land development improvements proposed for connection to any public right-of-way or easement having residential, commercial, industrial, or other land use shall conform to the dimensional and positional requirements set forth in drawing exhibits included in Section 17, provisions included elsewhere in these regulations and the FDOT "Policy and Guidelines for Vehicular Connections to Roads on the State Highway System".

4. All driveways connecting any public right-of-way with residential, commercial, industrial, or any other roadside establishment shall be constructed in accordance with the construction standards and under the supervision of the City of Marco Island Public Works Department. All construction under City of Marco Island jurisdiction within the road right-of-way shall meet minimum FDOT Standard Specifications for Road and Bridge Construction. The City retains the authority to make reasonable revisions, modifications, and adjustments at the site in order to provide an acceptable facility. All construction work pertaining to new driveway construction or alterations to existing driveways will require a right-of-way construction permit processed and authorized by the City Public Works Department. It is expressly stipulated that this PERMIT is a license for permissive use only and that the placing of facilities upon public property pursuant to PERMIT shall not operate to create or to vest any property right in said holder.

5. Permit Application for Construction:

   a. <u>Construction in conjunction with new structures:</u> The permittee shall indicate on two (2) sets of signed and sealed site plans, submitted at the same time as the City Building Department's construction permit application and plans, all proposed right-of-way improvements. After approval of the civil engineering and related site plans showing the right-of-way improvements, it is the

responsibility of the contractor to retrieve the civil engineering and related site plans site plans from the Public Works Department and submit them to the Building Department for final processing.

b. Construction not in conjunction with new structures: The applicant shall acquire a "PUBLIC RIGHT-OF-WAY PERMIT, OR PUBLIC UTILITIES PERMIT" from the Engineering department. The applicant shall submit the permit application with two (2) sets of site plans indicating all proposed right-of-way improvements for review, approval and / or denial.

c. Alterations: Existing driveways, which are being modified or relocated, will require a permit, obtained from the City of Marco Island Public Works Department prior to the commencement of construction. The applicant for the permit shall apply directly to the City of Marco Island Public Works Department with two (2) site plans indicating the proposed alterations.

d. Driveway connections: All driveway connections to a public right-of-way will require the issuance of a permit. The application for the permit whether for new driveway construction or alteration of an existing driveway shall contain two (2) site plans signed and sealed plans by a licensed engineer registered in the state of Florida. At the discretion of the City Public Works Director or authorized representative, the standard requirement for signed and sealed site plans for driveway construction may be waived.

6. Right-of-Way Construction Permit Application and Site Plan Information:

a. A right-of-way construction permit application shall be submitted with the following minimum information:

i. Owner's name, mailing address, and telephone number and email address if applicable.

ii. Site Plan indicating work being performed.

iii. Existing valley gutter / curb / swale.

iv. Electric or plumbing involved and sub-contractors name.

v. Contractor with license number and qualifier Name.

vi. Contractor's notarized signature.

vii. Legal description of lot or tract and / or address.

b. A site plan and related materials shall be submitted with the following minimum information:

i. Lot dimensions.

ii. Location or legal description of proposed driveway with respect to lot lines.

iii. All utilities highlighted, showing sewer, lateral lines, meters, etc.

iv. Location of proposed driveway with respect to lot lines.

v. Roadway name, width of pavement and right-of-way, swale location and curb and gutter, if applicable.

vi. Proposed driveway geometrics including width of driveway at the right-of-way line and size of radii or turnouts intersecting roadway.

vii. Type of pavement being used – asphaltic concrete (commercial only), concrete, pavers, etc.

viii. Attach a copy of the most recent survey or note if survey has been completed on the lot or tract and the corner survey pins are still intact. The lot or tract numbers shall be posted at the job site at front property corners, also on the side property corners when lot or tract is a corner lot.

ix. A traffic impact study conforming to City of Marco Island Public Works Department "Traffic Impact Study Procedures" (see Appendix B) is required for review/approval by the City Public Works Director or an authorized representative for a development proposal if trip generation during the peak season peak hour is expected to exceed 100 vehicles as determined by the City; if the site area is one (1) acre or larger; or, if the project site is adjacent to a roadway having an existing level of service of D, E, or F.

x. For all sites (excluding single family and duplex residences), a traffic signing and marking plan, signed and sealed by a registered professional engineer or architect must be submitted for review and approval prior to any City permits being issued. The following note needs to be shown on the traffic signing and marking plan:

"ALL TRAFFIC CONTROL DEVICES INCLUDING SIGNS AND PAVEMENT MARKINGS SHALL CONFORM TO THE MANUAL ON UNIFORM TRAFFIC CONTROL DEVICES (MUTCD), PUBLISHED BY THE U.S. DEPARTMENT OF TRANSPORTATION."

xi. For all sites that convey and discharge stormwater runoff into the City's right-of-way or easements (excluding individual single family residences), the engineering design of surface and sub-surface water management Facilities shall conform to the City of Marco Island Public Works Department's "Stormwater Management Requirements" herein

pursuant to Section 12 of this Handbook. If the total site area is 10.0 acres or larger or if the site has a total impervious area exceeding 2.0 acres, the applicant shall contact South Florida Water Management District for applicable permitting and approval requirements.

xii. Two (2) complete sets of on-site surface water management plans and drainage calculations signed and sealed by a Florida Registered Professional Engineer and approved by the City of Marco Island Public Works Department are required prior to issuance of any City permits.

xiii. Prior to certificate of occupancy and/or upon completion of on-site surface water management facilities, a certification by a Florida Registered Professional Engineer that the on-site surface water management facilities have been completed satisfactorily in accordance with the approved plan(s)/ specifications, is required by the City of Marco Island Public Works Department. A note appearing on the plans referred to under item 1) above stating the same information contained in item 2) above is required

xiv. For individual single-family residential sites on which re-surfacing or reconstruction of an existing driveway is proposed, the application for the PERMIT need only contain the following information including a sketch of the lot and existing driveway: owners name, mailing address, and telephone number; job address/Lot address; estimated Cost and right-of-way area for the proposed work; proposed materials to be incorporated into the work; distances drawn on City Supplied drawing of driveway configuration; acknowledgement of valley gutter or swale designs; and, contractors name and address and notarized signature on application.

xv. The Public Works Department will review the permit application. Where driveway swales or culverts are required by the City for driveway access and drainage, the permit applicant shall design all such drainage improvements, including appropriate design field surveys and stakeout of grades for swales and culverts during construction. Unless a design exception is granted by the City for justified reasons to be appropriately documented by the permit applicant, the permit applicant shall cause all driveways, swales, culverts, inlets and attendant drainage improvements (particularly all proposed elevations for the driveway swale or culvert area between any required sidewalk and the edge of street pavement) to be designed in accordance with drawing exhibits included in Section 19 of this Handbook, with final construction plans being signed and sealed by a Florida registered professional engineer and approved by the City Public Works Director or authorized representative.

c. Design and Specifications: The design of the individual driveways shall conform to and incorporate the following features:

i. Lot dimensions

ii. The driveway edges are to be connected flush to the edge of pavement of the roadway with adequate radii or taper to provide a safe turning maneuver and to avoid a hazard to the through traffic and to contain the vehicle within the paved portion of the driveway.

iii. Driveways shall be positioned to intersect as nearly as possible at right angles to the roadway. Acceptable paved driveway aprons shall be extended to the right-of-way / property line or to a minimum distance of twenty-five (25) feet from the edge of pavement of the roadway where right-of-way exceeds sixty (60) feet in width. Swale driveways are not permitted within the City Limits, unless as approved by the City Public Works Director or authorized representative as part of the approved right-of-way construction permit.

iv. Driveways, or any portion thereof, will not be constructed within side and rear lot public easements unless permitted by the City Public Works Director or authorized representative. If authorized, the responsibility and expense for removal and replacement shall be that of the permittee.

v. All driveways are to be constructed in such a manner as not to impair proper drainage within the road right-of-way.

vi. As part of the review of engineering designs and construction plans submitted by a permit applicant, the City will evaluate proposed driveway access and drainage features within and outside of right-of-way and easements. The City's evaluation shall include a final determination as to whether or not driveway culverts are required, and when so deemed necessary if the culvert end treatment shall comprise of standard FDOT mitered end sections or drainage inlets. Driveway culverts that are open-ended without a structured end treatment as stated above are not permissible.

vii. Concrete drives: The sub-grade shall be thoroughly compacted to a firm even surface, true to grade and cross section by means of watering, rolling, or tamping. The sub-base shall be moist at the time of concrete placement. Concrete shall develop a compressive strength of 3000 PSI in twenty-eight (28) days. The minimum thickness of a concrete driveway serving a single-family unit or a duplex shall be four (4) inches. The minimum thickness of a concrete driveway serving other than a single-family unit or duplex shall be six (6) inches. Each slab shall contain standard #10 gauge, 6" x 6" welded wire fabric to within four (4) inches of all edges and shall not cross expansion joints. There shall be an expansion joint along the boundary line between City

and private property (right-of-way line), and between a driveway and a concrete valley gutter, curb, sidewalk, or any other concrete structure. Other expansion joints shall be located so that no concrete slab shall be longer than eight (8) feet. All expansion joints shall be filled with one-half (1/2) inch pre-formed bituminous expansion joint filler conforming to ASTM D 994-53 or an alternate material acceptable to and approved by the City. All survey layout work including line and grade staking shall be performed by the permittee. No concrete shall be placed until the City Public Works Director or an authorized representative has inspected and approved the sub-base, concrete forms, welded wire mesh reinforcement and the expansion joint material and placement location. Request for inspection shall be made to the City Public Works Department forty-eight (48) hours in advance of the scheduled concrete placement.

viii. **Loose gravel, rocks, shell, ornamental stone, stamped concrete (Bomanite or equivalent) and similar materials that will result in increased maintenance or hazardous conditions for motorists, pedestrians and bicyclists shall not be authorized for placement within the right-of-way and easements.** Architectural pavement bricks and similar surface treatments for aesthetic enhancement will be permitted, subject to City reviews to determine appropriateness of proposed designs including considerations of safety, maintenance, liability and City criteria and standards to ensure consistency in attaining a community wide aesthetic appeal.

ix. Paving Block driveways: Paving block units shall be no less than 2-3/8" (60 mm) thick, meeting the requirements of ASTM C936-82. Horizontal joints between paving blocks are to be a maximum of 1/8" wide and filled with sand. Beneath paving blocks, a 1" thick settling bed using concrete sand or lime rock screenings is required. A 6" thick lime rock base course compacted to 98% maximum density as determined by AASHTO-180 is required below the settling bed. If future City work necessitates removal of any portion of the paving block driveway in the right-of-way, the City will replace that portion with like materials.

x. In areas where roadside swales are required, the right-of-way shall be graded a minimum of three (3) inches below design swale grades to allow for the installation of sod.

xi. When an access is to be located at horizontal curves, at hillcrests, at bridges, and other hazardous areas, special attention shall be taken to ensure safe ingress and egress in the design.

xii. A temporary access, when permitted, shall be utilized for a maximum six (6) months period from the date of permit issuance, unless otherwise approved.

xiii. Existing access points, which are not to be incorporated with the site's development, shall be totally removed and the right-of-way shall be restored prior to final approval by the Public Works Department.

7. Driveway Construction Approval and Maintenance:

   a. Prior to the start of construction, the permittee shall notify all appropriate utility companies of the proposed construction, to ensure that the construction will not interfere with, or interrupt, or pose any threat or danger to any utility services, and the Permittee is further responsible for learning and being aware of the location of any and all utility lines or equipment in the area where the proposed construction will take place. The Public Works Department shall be given a seventy-two (72) hour advance notice, prior to the final driveway inspection.

   b. During construction, the Public Works Department may, if needed, notify the responsible party to correct any right-of-way deficiencies. If the deficiencies are not corrected to the satisfaction of the Public Works Department, a "STOP WORK" order will be issued and the project will be stopped in its entirety. Prior to the Engineering Department signing the Building Department's "Control Card" for Certification of Occupancy, the permitted work within the right-of-way shall be completed in accordance with the plan approved by the City. All right-of-way disturbed during construction shall be restored equal to or better than the original conditions and approved by the Engineering Department.

   c. The maintenance of driveway access and the appurtenant attachments shall remain the responsibility of respective property owner. If the traffic patterns, points of connection, roadway geometrics, or traffic control devices are causing undue disruption of traffic or creating safety hazards at existing driveway, the City shall have the authority to deny or require re-design of a proposed driveway at a specific location or require re-design of an existing driveway. The City shall have the authority to deny access to a City street at the location specified in the Permit, if the Permittee fails to construct or alter the driveway in accordance with the Permit requirements.

   d. The cost of construction or alteration of a driveway shall be borne by the respective property owner. The respective property owner shall also bear the cost of alteration of a driveway required by the City due to increased or altered traffic flows generated by changes made by the respective property owner in the facilities or nature of business conducted at the location specified in the permit.

SECTION 11: STORM DRAINAGE IMPROVEMENTS

1. The following procedure shall be followed for the installation of storm drainage improvements within the public right-of-way.

    a. General: Submission of plans and specifications signed and sealed by a Florida Registered Professional Engineer of the storm drainage improvements for review/approval by the Public Works Department prior to issuance of any City permits.

    b. Upon completion of the construction of the storm drainage improvements, a Certification by a Florida Registered Professional Engineer, stating that the work has been satisfactorily completed in accordance with the approved plans and specifications is required by the Public Works Department.

    c. Rainfall and Runoff Criteria: The system shall be designed based on data obtained from rainfall "intensity-duration" curves for the following expected frequencies, or greater:

        i. Twenty-five (25) year intervals for major drainage channels, draining several large drainage basins (2 – 10 square miles).

        ii. Five (5) year intervals for all other drainage. Rainfall intensity data shall be taken from references acceptable to the City.

        iii. A suitable minimum runoff coefficient: For conventional (2-4 lots per acre) subdivisions is 0.35. For commercial properties is 0.50 +, depending upon zoning and anticipated development. The "rational method" of design is recommended; however, an equivalent criteria and method may be substituted if approved.

    d. Conflicting Pipelines:

        i. At various locations along the alignment of drainage construction work, storm sewers and related structures such as inlets will occasionally come into physical conflict with existing potable water lines, gravity sanitary sewers, force main sanitary sewers, reuse or effluent lines and various other mains such as water and sanitary sewer house service laterals. At intersecting points of conflict, the existing utility line or lines may be approved by the City for adjustment or relocation.

        If authorized, the existing utility line, which causes a conflict with a proposed drainage improvement, shall be removed and re-aligned where possible to pass over or beneath the storm sewer subject to the condition that neither the utility line or the storm sewer is lessened in strength and service life and that both lines continue to

perform intended functions consistent with original designs. Existing cement asbestos pipe or vitrified clay pipe may need to be replaced with cast iron as directed by the City Public Works director or an authorized representative to ensure long-term structural integrity and service life.

Where the conflict cannot be remedied by adjustment or relocation of the utility line due to excessive costs or restrictive site conditions, the permittee may be authorized by the City to proceed with design and construction of conflict structures, which enclose the conflicting utility. Conflict structures and the extension of utility lines into the structure shall meet the designs and specifications of the City, FDOT, Collier County government and the Florida Department of Environmental Protection as applicable.

ii. Conflict boxes or structures shall have inverts with at least one (1) foot clearance between conflicting pipe and the bottom of structure. Inverts may be constructed of concrete or brick with top surface plastered.

iii. Steel casings shall be utilized as part of the designs to eliminate or minimize conflicts between proposed storm sewer pipes and existing utility lines to the extent required by design standards set forth or referenced in this Handbook, or as otherwise directed by the Public Works Director or authorized representative.

e. Connections to City Storm Drainage System: For outlet or discharge pipes from proposed detention areas that will be inflowing into City storm sewer pipes or similar drainage systems, the following requirements apply:

i. Provisions need to be made to ensure that adequate capacity is available in the City's downstream storm sewer system or downstream surface water body. Evaluation reports and drainage calculations shall be submitted as part of the right-of-way construction permit application, certified through signature and seal by a Florida registered professional engineer.

ii. A hold harmless guarantee shall be provided to the Public Works Director in a form acceptable to the City Attorney for the purpose of releasing the City of any liability and any occurrence of failure and subsequent flooding of this property, which will be served by the publicly owned / maintained storm sewer system.

iii. The following additional information shall, upon request, be supplied to the City if the proposed work involves the alteration of a public drainage facility: (1) Calculated capacity if existing or proposed pipe, swale or ditch; (2) Existing or proposed pipe diameter, length, and type; (3) Plan and cross-section of existing or proposed pipe, swale

or ditch including invert elevations; (4) Proposed fill material and source; (5) Catch basin or clean-out arrangements, if applicable; and (6) Joint connections, if applicable.

f. Materials and Construction:

i. Reinforced Concrete Pipe: Reinforced concrete pipe shall meet the requirements of Section 430 and 941 of the FDOT Standard Specifications. Construction shall be in accordance with Section 125 and 430 of the FDOT Standard Specifications.

ii. Corrugated Steel Pipe and Pipe Arch: Corrugated steel pipe and pipe arch shall meet the requirements of Section 430 and 943 of the FDOT Standard Specifications. Construction shall be in accordance with Section 125 and Section 430 of the FDOT Standard Specifications.

iii. Corrugated Aluminum Pipe and Pipe Arch: Corrugated aluminum pipe and pipe arch shall meet the requirements of Section 430 and 945 of the FDOT Standard Specifications. Construction shall be in accordance with Section 125 and Section 430 of the FDOT Standard Specifications.

iv. Corrugated Polyethylene Pipe: Corrugated polyethylene (unslotted) shall conform to AASHTO M294 “Interim Specification for Corrugated Polyethylene Pipe, 12” to 24” Diameter” and ASTM F-667 “Standard Specification for Large Diameter Corrugated Polyethylene Tubing and Fittings” (8”, 10”, 12”, 18” and 24”) or approved equal. Construction shall be in accordance with Section 125 and Section 430 of the FDOT Standard Specifications.

v. Inlets, Manholes and Junction Boxes: Inlets, manholes and junction boxes shall meet the requirements of Section 400, 415, and 425 of the FDOT Standard Specifications.

vi. If the storm drainage improvements, including swales, are not installed correctly, final Public Works Department approval will be withheld until corrected.

vii. Six months will be the maximum time allowable for temporary culverts to be incorporated with the drainage ways of the City unless otherwise specified by the City Public Works Director.

2. If the City has constructed or plans to construct stormwater drainage Facilities that are proposed to be used by a developer/permittee in lieu of a separate stormwater drainage improvement usually required to be constructed by the developer/permittee, the City may accept a capital contribution from the developer/permittee thereby waiving certain construction requirements under the

right-of-way construction permit. If the City plans to construct stormwater drainage Facilities, which are proposed to be constructed by a developer, the City may grant a stormwater utility fee credit to the extent of the costs avoided by the City by the construction of the stormwater drainage Facilities by the developer/permittee.

SECTION 12: STORMWATER MANAGEMENT REQUIREMENTS

1. Stormwater Requirements For Right-of-Way Permitting: Surface and stormwater management requirements for development and redevelopment within the City of Marco Island for all land uses and zoning, including construction of proposed drainage facilities or modifications to existing drainage facilities within public right-of-way or easements, shall conform to the following:

    a. Current provisions set forth in the South Florida Water Management District Environmental Resource Permit Information Manual are referenced and hereby incorporated into and made a part of this Ordinance for right-of-way permitting. The Volume IV manual is applicable as may be amended or superseded.

    b. Florida Administrative Code Chapters 40E-0, 40E-1, 40E-4, 40E-40, 40E-41, and 40E-400, as may be amended or superseded, are referenced and hereby incorporated into and made a part of this Ordinance for right-of-way permitting.

    c. Florida Statute 403 (Mangrove Trimming and Preservation Act) and Florida Administrative Code Chapters 62-302 and 62-340, as may be amended or superseded, are referenced and hereby incorporated into and made a part of this Ordinance for right-of-way permitting.

    d. In accordance with the most current and latest provisions of Florida Administrative Code Chapter 40E-4, Section 40E-4.091(1) (a), and the "Basis of Review for Environmental Resource Permit Applications within the South Florida Water Management District – December 2004".

    e. Specifically, in accordance with the following Sections of the "Basis of Review for Environmental Resource Permit Applications within the South Florida Water Management District – December 2004":

        i. <u>Section 5.2.1 (a) and (b) Volumetric Requirements For Retention/Detention Criteria:</u>

        (a) Retention, detention, or both retention and detention in the overall system, including swales, lakes, canals, greenways, etc., shall be provided for one of the three following criteria or equivalent combinations thereof:

            1. Wet detention volume shall be provided for the first inch of runoff from the developed project, or the total runoff of 2.5 inches times the percentage of imperviousness, whichever is greater.
            2. Dry detention volume shall be provided equal to 75 percent of the above amounts computed for wet detention.
            3. Retention volume shall be provided equal to 50 percent of the above amounts computed for wet detention. Retention

volume included in flood protection calculations requires a guarantee of long-term operation and maintenance of system bleed-down ability. Examples of such guarantee include evidence of excellent soil percolation rates, such as coastal ridge sands, or an operations entity, which specifically reserves funds for operation, maintenance and replacement (example: Orange County MSTU). (NOTE: Orange County subdivision regulation criteria for retention -published by Orange County in Orange County Subdivision Regulations - may be utilized for Orange County MSTU projects in lieu of District retention criteria where retention volumes exceed one half inch. This information is hereby published by reference and incorporated into this rule.)

(b) Systems with inlets in grassed areas will be credited with up to 0.2 inches of the required wet detention amount for the contributing areas. Full credit will be based on a ratio of 10:1 impervious area (paved or building area) to pervious area (i.e. the grassed area) with proportionately less credit granted for greater ratios.

ii. Section 5.2.2 - Land Use and Coverage Criteria:

(a) Commercial or industrial zoned projects shall provide at least one half inch of dry detention or retention pretreatment as part of the required retention / detention, unless reasonable assurances can be offered that hazardous materials will not enter the project's surface water management system. Such assurances include, for example, deed restrictions on property planned for re-sale, type of occupancy, recorded lease agreements, local government restrictive codes, ordinances, licenses, and engineered containment systems.

(b) Projects having greater than 40% impervious area and which discharge directly to the following receiving waters shall provide at least one half inch of dry detention or retention pretreatment as part of the required retention/detention. Receiving waters being addressed are:

1. Lake Okeechobee and the Kissimmee River.
2. Water bodies designated as Class I or Class II waters by the Florida Department of Environmental Protection.
3. Canals back-pumped to Lake Okeechobee or to the Conservation areas, or proposed for back-pumping.
4. Other areas, such as the Savannas in St. Lucie and Martin Counties; the Six Mile Cypress Strand; the Big Cypress area of Collier County; and lands acquired by the District pursuant to Section 373.59, Florida Statutes, Water Management Lands Trust Fund (Save Our Rivers); mitigation bank lands, as set forth in Section 4.4.
5. Outstanding Florida Waters as defined in Chapter 62-302,

Florida Administrative Code; and Aquatic Preserves as created and provided for in Chapter 258, Florida Statutes.

6. Water bodies within a District permitted public water supply wellfield cone-of-depression which are not separated from the aquifer by strata at least ten feet thick and having an average saturated hydraulic conductivity of less than 0.1 foot per day; where the cone of- depression is defined by one of the following:

a. in those areas of the District where no local wellfield protection ordinance has been adopted by the local governing body, the one foot drawdown line as expressed in the water table aquifer under conditions of no rainfall and 100 days of pumpage at the permitted average daily pumpage rate (where significant canal recharge is indicated, canal recharge representative of a 1 in 100 year drought will be considered);

b. Broward County Wellfield Protection Ordinance contour for Zone 3 (Broward County Wellfield Protection Ordinance 84- 60, as incorporated into Broward County Code Chapter 27, Article XIII, enacted in August 1984). This information is hereby published by reference and incorporated into this rule.

c. Dade County Wellfield Protection Ordinance contours showing maximum limits (Section 24-12.1 Protection of Public Potable Water Supply Wells; Chapter 24 Environmental Protection; Code of Metropolitan Dade County, Florida). This information is hereby published by reference and incorporated into this rule.

(c) Water surface and roofed areas can be deducted from site areas only for water quality pervious/impervious calculations. The water surface area meeting dimensional criteria may also be subtracted from the total site area when making final water quality treatment volume calculations.

(d) In cases of widening existing urban public highway projects, the District shall reduce the water quality requirements, if the applicant provides documentation, which demonstrates that all reasonable design alternatives have been considered, and which provides evidence that the alternatives are all cost-prohibitive.

(e) Projects located within cones of depression - Retention/detention area locations shall not reduce hydraulic recharge distances to public water supply wells in excess of 2 percent, or shall wet retention/detention areas be closer to public water supply wells than 300 feet.

iii. Section 5.3.1 - Natural Water Bodies and Existing Water Bodies:

Natural areas and existing water bodies may be used for retention/detention purposes when not in conflict with environmental (see subsection 4.2.2.4), water quality, (see Sections 4.2.4 - 4.2.4.5 herein) or public use considerations. Candidate areas for such purposes include:

(a) Previously degraded areas
(b) Man made areas such as borrow pits, for example
(c) Extensive areas which have the ability to absorb impacts easily
(d) Areas incorporated into a system with mitigation features.

iv. Section 5.4 - Underground Exfiltration Systems:

(a) Systems shall be designed for the retention volumes specified in Section 5.2.1 for retention systems, exfiltrated over one hour for retention purposes, prior to overflow, and based on test data for the site. (Note: such systems will not be acceptable on projects to be operated by entities other than single owners or entities with full time maintenance staff.)
(b) A safety factor of two or more shall be applied to the design to allow for geological uncertainties.
(c) A dry system is one with the pipe invert at or above the average wet season water table.

v. Section 5.7 - Impervious Areas:

Runoff shall be discharged from impervious surfaces through retention areas, detention devices, filtering and cleansing devices, or subjected to some other type of Best Management Practice (BMP) prior to discharge from the project site. For projects, which include substantial paved areas, such as shopping centers, large highway intersections with frequent stopped traffic, and high-density developments, provisions shall be made for the removal of oil, grease and sediment from storm water discharges.

vi. Section 6.2 - Discharge Rate:

Off-site discharge rate is limited to rates not causing adverse impacts to existing off-site properties, and:

(a) historic discharge rates
(b) in all other areas of the City off-site discharge shall not be in excess of 0.15 cfs/acre or to rates determined in previous District permit actions
(c) rates specified in District criteria (see Appendix 2).

vii. Section 6.3 - Design Storm:
Unless otherwise specified by previous District permits or District criteria, a storm event of 3-day duration and 25-year return frequency shall be used in computing off-site discharge rates. Applicants are advised that local drainage districts or local governments may require more stringent design storm criteria. An applicant who feels its project is subject to unusual site-specific conditions may, as a part of the permit application process, request an alternate discharge rate.

2. In addition to the foregoing, the following stormwater drainage requirements and criteria shall apply and will also be used by permittee's in the City of Marco Island:

   a. Offsite rainfall-runoff or discharge caused and contributed by a development is limited to amounts that will not flood and cause adverse off-site impacts to downstream receiving systems and real property. The allowable rainfall-runoff or discharge shall be determined for each individual right-of-way construction permit by the most restrictive criteria listed below at the sole discretion and determination of the City's Public Works Director or authorized representative:

      i. Historical pre-development discharges or amounts approved in previous City or SFWMD permits.

      ii. Amounts specified in the SFWMD Basis of Review (Section 12, sub-article 1e above).

      iv. Amounts based on available system capacity for downstream drainage systems subject to certification by signature and seal by a Florida registered Professional Engineer.

      v. Amounts based on available system capacity set forth in the City's Stormwater Management Master Plan or basin models and studies.

      vi. A storm event of 3-day duration and 25-year return frequency shall be used in computing off-site discharge rates.

   b. Stormwater drainage designs shall provide flood protection in accordance with the following design storm events:

      i. Collector roadways: 10-year, 1-day storm event.

      ii. Local streets: 5-year, 3-day storm event.

      iii. Flood protection-building elevations: 100-year storm event.

iv. Roadway elevation: minimum roadway crown elevation shall be at least 2 feet higher than the control elevation in order to preserve the structural integrity of the pavement sub grade.

SECTION 13: SOD & APPROVED GROUNDCOVER SPECIES PLACEMENT

1. Sod and other approved groundcover plant species placement requirements in public right-of-way and easements:

   A. The permittee or appropriately licensed contractor, if designated as an authorized agent, must apply for a right-of-way construction permit to perform sod or other approved ground cover plant species (Perennial Peanut and Sunshine Mimosa) installation work and / or maintenance thereof in public right-of-way. Appropriate design drawings or sketches are required and shall be submitted containing the following minimum information:

      i. Distances from centerline of the roadway, driveway or traveled way to the front yard property line / right-of-way line.

      ii. Distances from the edge of pavement of the roadway to the swale or ditch flow line and invert.

      iii. Final finish ground surface grades of all disturbed areas to receive sod or other approved ground cover plant species.

      iv. Distances from the edge of sidewalks to the swale or ditch flow line and invert.

      v. Location of all drainage inlets and related structures.

      vi. Location of all existing utilities.

      vii. The extent or amount of excavation to be undertaken.

      viii. Distances from edge of pavement of a roadway or driveway of any abutting property to all side yard and rear yard property lines / right-of-way lines.

      ix. Width of all driveways and distances to front yard and side yard side property lines.

      x. Lot, Block, Unit number and street name and number.

   B. Grass sod shall be Centipede, Bahia grass, or St. Augustine type and shall be well matted with grass roots, except that where sodding will adjoin or be in sufficiently close proximity to private lawns, the existing type of sod must be used. Materials and construction methods of sodding shall meet the requirements of Section 570 of the FDOT Standard Specifications.

C. Where City Public Works Director deems acceptable, grass seed shall be a mixture of 20 parts of Bermuda seed and 80 parts of Argentine Bahia. Materials and construction methods of grassing shall meet the requirements of Section 575 of the FDOT Standard Specifications.

D. Perennial Peanut, sometimes described as Echo Turf (*Arachis glabrata Berth*) and Sunshine Mimosa, sometimes described as Powder Puff (*Mimosa strigillosa*) are the approved groundcovers plant species that shall be used as alternative plant species for groundcover other than sod or turf in the right of way areas.

E. The sod or other approved alternative groundcover plant species shall be placed to the proper design grades and cross-section to ensure the effective and efficient design flow and discharge of stormwater in the swale.

F. In excavating for the placement of sod or other approved alternative groundcover plant species, a minimum three (3) inch undercut shall be provided, and it shall be the responsibility of the permittee to ensure that sod does not extend above the elevation of the roadway edge of pavement.

G. Upon request, the Public Works Department may assist in designating the design swale grades. Notwithstanding the foregoing, permittee are required and shall be held responsible to provide final swale design grades and to ensure that sod installation construction complies with the provisions set forth in this Handbook and FDOT design standard references.

H. It shall be the abutting property owner's responsibility to maintain the sod mowing, etc, and to ensure that the swale invert is kept, unless otherwise stipulated by the City Public Works Director.

I. In cases where sod or other approved groundcover plant species is associated with, and is approved, as part of a building permit, the entire swale shall be undercut to allow for the top of sod to be placed at design elevations, and sod shall be installed, unless otherwise approved, prior to the City Public Works Department before Building Department may issue Certification of Occupancy/Completion.

SECTION 14: SIDEWALK / BIKEWAY CONSTRUCTION

1. The City's minimum requirements for sidewalk and bikeway/bike lane design and construction activities in public right-of-way and easements are as follows:

    a. General:

        i. Property owners and permittees are required to construct concrete sidewalks within the right-of-way along the property line at all locations where sidewalks are non-existent.

        ii. Permittees proposing to construct sidewalks or bikeways/bike lanes in right-of-way and easements shall have appropriate engineering design plans and specifications prepared, certified by signature and seal by a licensed professional engineer and submitted to the Public Works Department as part of an application for a right-of-way construction permit.

        iii. Required or proposed sidewalks and bikeways/bike lanes shall be designed and constructed consistent with attached or referenced minimum standard engineering design drawings and illustrations set forth in Section 17 of this Handbook.

        iv. The engineering design plans for required or proposed sidewalks shall include existing and proposed ground surface elevations within the limits of construction and also finish elevations at the back of sidewalks.

        v. All sidewalks and off roadway bikeways shall be constructed of Portland Cement Concrete unless otherwise recommended or approved by the City Public Works Department.

        Pedestrian sidewalks shall be at least five (5) feet in width. Multiple use pedestrian and bicycle sidewalks (commonly known as Shared Use Paths) at any location and pedestrian sidewalks at commercial land use locations shall also be constructed of Portland Cement Concrete having a minimum width of eight (8) feet. In the downtown district, all off roadway pedestrian and bicycle use facilities (i.e., Sidewalks / bikeways / Shared Use Paths) shall be of a minimum width of ten (10) feet.

        Provisions shall be made for handicap crossings at all street intersections, and at corner land parcels Sidewalks / bikeways / Shared Use Paths shall extend to the pedestrian crosswalk(s) within the roadway pavement. Additionally, sidewalks / bikeways / Shared Use Paths shall extend from edge of pavement to edge of pavement between intersecting streets, alleys, etc. to provide a continuous facility

between same unless otherwise recommended or approved by the City Public Works Department.

vi. Unless otherwise waived by the City for justified requests documented by a permit applicant accounting for unique circumstances or unusual site conditions, all concrete sidewalks and Shared Use Paths within the right-of-way shall be extended and constructed through the entire widths of existing or proposed driveways. Each sidewalk and Shared Use Path project at driveway locations shall be constructed as a singular and continuous surface not ending on an approach side of a driveway and restarting on the departure side of a driveway.

vii. All proposed concrete sidewalks and Shared Use Paths within the right-of-way, which must connect onto an existing similar facility with an elevation differential, shall be transitioned with a "ramp" with a maximum slope of 12:1 slope to match the existing adjacent facility.

viii. The proposed back of sidewalk and Shared Use Path elevations running longitudinally along City right-of-way and the roadway shall be at relatively flat or gradually ascending and descending grades in lieu of abrupt "berming up" or short vertical curves at proposed driveways.

b. Concrete:

i. The concrete sidewalks, Shared Use Paths and bikeways where appropriate shall be a minimum of four (4) inches thick, except that at alley intersections and driveways the concrete shall be six (6) inches thick. All concrete construction and surface finish work shall be in conformance with Section 522 (Concrete Sidewalks) of the Florida Department of Transportation Standard Specifications for Road and Bridge Construction, latest edition.

c. Asphalt:

i. Proposed asphalt design sidewalks, Shared Use Paths, bikeways where appropriate and various access paths if approved for construction by the City shall be constructed to specific engineering designs and specifications established by the City Public Works Department.

ii. In general, authorized asphalt sidewalks, Shared Use Paths, bikeways where appropriate and various access paths shall be no less than four (4) inches of compacted limerock base over an appropriately stabilized sub grade, primed and surfaced with a minimum of one (1) inch of Type II or Type S-I asphaltic concrete.

d. Paving Brick/Block:

i. Where authorized, paving brick/block sidewalks, Shared Use Paths, bikeways where appropriate and various access paths shall be designed and constructed to engineering designs and specifications established by the City on a location-by-location basis.

In general, the authorized paving brick/block materials and use shall be no less than 2 3/8" (60mm) thick paving units meeting the requirements of ASTM C936-82; and installed on top of a one (1) inch thick settling bed using concrete sand or limerock screenings; and installed on top of a over four (4) inch thick limerock base course compacted to 98% maximum density as determined by AASHTO T-180. Horizontal joints between paving bricks/blocks are to be a maximum of 1/8" wide and filled with sand.

Where paving brick/block sidewalks, Shared Use Paths, bikeways where appropriate and various access paths are authorized within vehicular travel lanes of public roadways, the engineering designs and construction by a licensed professional engineer shall include a concrete foundation slab as further depicted by drawings included in Section 19 in this Handbook.

e. Public Safety (during construction, alteration or repair of sidewalks, Shared Use Paths, bikeways where appropriate and various access paths): In areas of substantial vehicular or pedestrian traffic as determined by the Public Works Department the contractor shall provide a temporary safe walkway around the construction work area.

i. The City Public Works Department may require the contractor to install flashing warning lights in areas where warranted due to public health, safety and welfare concerns or existing site hazards.

ii. Barricades or other barriers shall be used to prevent any possibility of injury to the public caused by the contractor's construction work.

iii. The temporary safe walkway areas shall be kept clean of sand, stones and any other deleterious material that could cause a pedestrian accident. All construction work areas within the limits of construction shall be appropriately signed and barricaded.

iv. Dewatering operations shall not interfere with the use of sidewalks; temporary sidewalks and detours shall be utilized to maintain safe sidewalks and access.

SECTION 15: ALLEY IMPROVEMENTS

1. The City's minimum requirements for alley design and construction activities in public right-of-way and easements are as follows:

    a. General: For land development sites and projects which have proposed access improvements that abut or connect onto an existing adjacent alley right-of-way, or when land development projects have proposed access onto an alley easement, or when land development sites and projects will otherwise impact existing alleys that do or do not currently meet City Code provisions or engineering standards as determined by the City Public Works Department, the following are required of the permit applicant:

        i. Submit complete engineering design plans and specifications for proposed alley improvements, signed and sealed by a licensed professional engineer for review/approval by the City Public Works Department.

        ii. The City shall determine the extent of required alley pavement and drainage improvements, along the land development's site alley property line and along the alley length between the intersections of the two nearest City streets, as a function of the degree of impact the land development project shall burden the existing alley Facility that may not accommodate additional impacts.

        iii. Depending on the existing condition of an alley to be impacted by a land development project and in consideration of traffic circulation and public safety, the City may require reconstruction of a portion of an existing alley adjacent to the site property line commencing at the nearest side street intersection and terminating on the departure side of the development's connection point to the alley.

        iv. Prior to the City issuing a Certificate of Occupancy and before the City approves and accepts the constructed improvements and work which shall effectuate close out of the right-of-way construction permit, a written certification by signature and seal by licensed professional engineer attesting that the work has been completed satisfactorily in accordance with the approved plans is required by the City Public Works Department.

        v. All alleys that serve as a Fire Lane shall meet State and Local Fire Code Standards.

    b. Requirements in Public Right-of-Way: The permit applicant shall submit complete engineering design plans and specifications for proposed alley improvements and impacts signed and sealed by a licensed professional

engineer for review/approval by the City Public Works Department. The design plans and specifications shall contain at a minimum the following:

i. Alley right-of-way lines.

ii. Right-of-way lines of the two nearest City streets.

iii. Existing topography and Facilities including location of street / alley pavement, sidewalks / bikeways, curbs, swales, storm drainage, water/sewer lines, utilities, trees, etc.

iv. Existing elevations at minimum of 25 foot intervals located along the edge of alley or street pavement, along the centerline (or flow line) of alley or street, along the right-of-way lines, along street swales and at storm drainage structures including inlet elevations and pipe invert elevations.

v. Proposed elevations at minimum of 25 foot intervals located along the edge of alley or street pavement, along the centerline (or flow line) of alley or street, along the right-of-way lines, along street swales and at storm drainage structures including inlet elevations and pipe invert elevations.

vi. Within the proposed limits of construction for the alley improvements, adequate horizontal and vertical transitions to both adjacent ends of the alley need to be provided as well as provisions for existing and modified stormwater runoff patterns to/from adjacent ends of the alley. The proposed edge of alley pavement elevations needs to match existing site elevations in order to provide for existing runoff patterns from adjacent lots. For alley reconstruction and expansion projects, a typical alley section incorporating use of concrete valley gutters for drainage may be necessary and required.

vii. Asphaltic concrete shall be a minimum of one (1) inch thick, Type II or equivalent. Limerock base shall be a minimum of six (6) inches thick, compacted to 98% maximum density per AASHTO T-180. Stabilized sub grade shall be a standard thickness of twelve (12) inches at 98% maximum density per AASHTO T-180 (minimum LBR 40 or FBV 50).

viii. The following general engineering notes shall be shown on the final construction plans and specifications: “Compaction tests required for construction of pavement: 1 for sub grade and 1 for base course depending on the scope and length of the project. The City of Marco Island Public Works Department to select test locations. All laboratory and field testing shall be the cost responsibility of the permittee or authorized agent(s).”

ix. The permittee's contractor shall verify the existence and "as-built" locations of underground utilities at least forty-eight (48) hours prior to start of construction at each work location within the limits of construction.

x. All work within the City right-of-way shall be guaranteed by the permittee for a period of one (1) year from date of completion of the work and formal acceptance by the City.

xi. All disturbed ground surfaces shall be re-sodded.

xii. Installation and maintenance of traffic control devices during construction shall be the contractor's responsibility in accord with FDOT Standard Specifications for Road and Bridge Construction.

xiii. Before alley construction is started, the permittee shall submit the results of TV camera inspections of existing sanitary sewer lines within the limits or vicinity of construction from the City's utility department.

xiv. Renovate or relocate utility boxes and utility poles to on-site open areas subject to approval by the City.

xv. Provide minimum width easements where needed and justified to serve for a public purpose.

xvi. The permittee or the utility owner is responsible for all costs associated with relocation of any and all any conflicting utilities or installation of new or extension utilities. The permit applicant should contact appropriate utility owners to discuss financial responsibilities in this regard early in the planning and engineering design stages.

xvii. Where alley improvements involve a change in alley grade by more then 8" (+/-) or an average slope of 2% greater then existing, the following additional procedures and conditions shall apply:

a) Any builder, contractor, or property owner who desires to perform alleyway construction or major changes to a public alley due to proposed improvements on private property must submit plans and rights-of-way permit application to the Public Works Department.

b) The Public Works Department will review and process the application in accordance with standards as set forth in this Resolution and as established by Marco Island Code and shall coordinate all review with the Building Division whenever proposed improvements on private property are planned.

c) Adjacent property owners shall be provided written notice of any proposed major changes to an alley.

d) Any major change that proposed to modify the elevation of an alley by more than 8 inches (+/-) or produces an average change in grade of more than 2% (2 feet of height in 100 feet of length) over existing conditions will require final approval by City Council if any adjoining property owner(s) that will be affected by the alley changes submits a written objection to the improvements. However, in no event shall an alley's existing elevation be modified beyond the boundaries of the applicant's property. Furthermore, the applicant shall be solely responsible for the cost of all proposed improvements, as well as any additional storm drainage that may be required in the alleyway, or on adjoining properties, as a result of the applicant's changes to the alley. If no objections are submitted and the Public Works Director approves all changes, the permit application will be administratively processed.

e) The slope of driveway access to private properties within the public right-of-way shall not exceed ADA Standards of 8 percent.

f) Any application submitted by private property owners for the City to perform major improvements (i.e. paving, crushed shell, change elevations, etc.) to an alleyway will be processed in the order received and be subject to available City funding and City resources. All requests will be evaluated by the Construction Management Department to determine the extent of improvements within 30 days from receipt. When a request from a property owner(s) to undertake major improvements is denied, the property owner shall have the right of appeal to City Council.

SECTION 16: ON STREET PARKING

1. The City's requirements for on street parking proposals in the public right-of-way are as follows:

    a. General: On street parking may be allowed in City streets adjacent to commercially zoned property. The permittee shall submit complete plans and specifications for on street parking proposals to the Public Works Department for review and approval prior to issuance of a right-of-way permit. The plans and specifications shall be signed and sealed by a licensed engineer registered in the State of Florida with inclusion of the following minimum requirements for work within right-of-way:

        i. The plans submitted shall be drawn to an appropriate scale(s).

        ii. Adjacent Right-of-Way lines.

        iii. Right-of-Way lines of the two nearest City streets.

        iv. Existing topography including location of street / alley pavement, sidewalks / bikeways, curbs, swales, storm drainage, water / sewer lines, utilities, trees, fie hydrants, etc.

        v. Existing elevations at minimum ten (10) foot intervals for edge of alley / street pavement edge of alley / street pavement, centerline swales, sidewalks / bikeways, (existing and / or potential future), Right-of-Way lines, any storm drainage structures.

        vi. Proposed elevations at minimum ten (10) foot intervals of proposed on street park area(s) and any associated concrete curbing.

        vii. Parking space markings in conformance with the Manual of Uniform Traffic Control Devices (MUTCD).

        viii. On street parking areas will have a minimum ten (10) foot triangular taper on both ends to provide for vehicular turning movements into and out of the terminal parking space(s).

        ix. Concrete vertical curbs will be constructed along the entire edge of on street pavement away from the existing street / alley pavement. A two (2) foot offset from the existing street / alley pavement to the proposed curb will be provided. Concrete curbing work shall be in conformance with Sections 520, 345, 932, 921, 901, 923, and 924, of the Florida Department of Transportation Standard Specifications for Road and Bridge Construction, latest edition.

x. On street parking area pavement shall be constructed to specifications established by the City Public Works Department, but shall be no less than six (6) inches of compacted lime rock base over a stabilized sub grade, primed and surfaced with a minimum of two (2) inch of Type II asphaltic concrete.

xi. Parking must meet State and Local Fire Code clearances for Life Safety Devices.

b. Upon completion of the construction of the on street parking area, a certification signed and sealed by a licensed engineer registered in the State of Florida shall be submitted to the City's Public Works Department by the permittee to document that the authorized work has been satisfactorily completed in accordance with the approved plans.

c. All on-street parking shall comply with existing parking provisions in the Code.

SECTION 17: DRAWINGS AND ILLUSTRATIONS REPRESENTING MINIMUM REQUIREMENTS FOR USE IN THE PUBLIC RIGHT-OF-WAY

1. In this section, the attached City drawings and illustrations shall constitute minimum standard engineering design requirements, subject to and conditioned upon revisions and supplements in the future as deemed necessary by the City's Public Works Department.

   a. In addition to the City's minimum standard engineering design drawings and illustrations incorporated in the Handbook, pertinent design and construction drawings/illustrations/sketches prepared and issued separately from this Handbook by the City of Marco Island, agencies of the State of Florida and various federal organizations shall constitute minimum City standards as follows:

      i. State of Florida Accessibility Code
      ii. City of Marco Island Utilities/Engineering Manual of Standards and Specifications for water, sewer and reclaimed water mains.
      iii. State of Florida Department of Transportation (FDOT) Design Standards for Design, Construction, Maintenance and Utility Operations on the State Highway System.
      iv. FDOT Manual on Uniform Minimum Standards for Design, Construction and Maintenance and Maintenance for Streets and Highways.
      v. Basis of Review Manual, South Florida Water Management District.
      vi. Manual on Uniform Traffic Control Devices (MUTCD) latest edition, published by the U.S. Department of Transportation.
      vii. FDOT Utility Accommodation Manual.
      viii. State of Florida Fire Code and City of Marco Island adopted amendments.

SINGLE FAMILY & DUPLEX DRIVEWAY

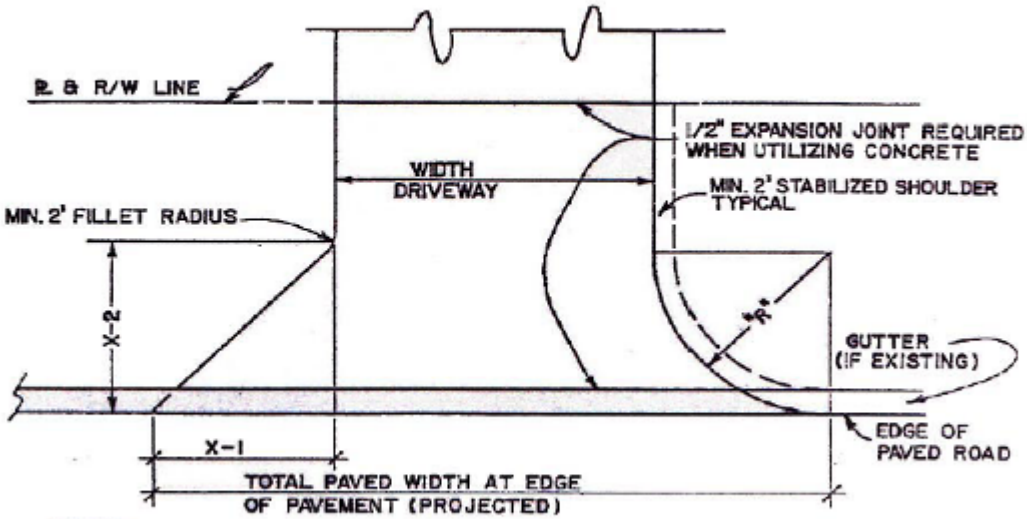

NOTES

1. TURNOUT (DIMENSIONS X-1 & X-2) SHALL BE REQUIRED WHEN USING CONCRETE UNLESS OTHERWISE APPROVED
2. WHERE GUTTER IS USED THE DIMENSIONS SHOWN SHALL BE AS PROJECTED FROM EDGE OF PAVEMENT
3. FLORIDA D.O.T. PRIMARY AND SECONDARY AND COUNTY ARTERIAL STREETS REQUIRE MINIMUM DIMENSIONS OF 12 FOOT DRIVE WIDTH WITH A MINIMUM RADIUS OF 15 FOOT. (REGARDLESS OF DRIVE WIDTH — A 15 FOOT RADIUS WILL BE REQUIRED)

MINIMUM DRIVEWAY DIMENSION COMBINATION

DRIVEWAY WIDTH	RADIUS FILLET		TURNOUT		
	R	TOTAL WIDTH	X-1	X-2	TOTAL WIDTH
10'	10'	30'	10'	8'	30'
12'	9'	30'	9'	7'	30'
13'	8.5'	30'	8.5'	6.5'	30'
14'	8'	30'	8'	6'	30'
15'	7.5'	30'	7.5'	5.5'	30'
16'	7'	30'	7'	5'	30'
17'	6.5'	30'	6.5'	4.5'	30'
18'	6'	30'	6'	4'	30'
19'	5.5'	30'	5.5'	4'	30'
20'	5	30'	5'	4'	30'
21'	4.5'	30'	4.5'	3'	30'
22'	4'	30'	4'	3'	30'
24'	3'	30'	3'	3'	30'

NOTES

THESE DIMENSION ARE NOT APPLICABLE TO DRIVEWAYS CONSTRUCTED AROUND CUL-DE-SACS AND SHARP RADIUS. CONTACT THE ENGINEERING DEPARTMENT FOR DETAILS CONCERNING VARIANCES.

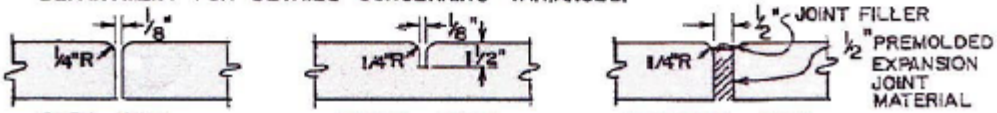

OPEN JOINT — DUMMY JOINT — EXPANSION JOINT

City of Marco Island
Public Right-of-Way Construction Standards Handbook
Single Family and Duplex Driveway

Sheet No. 1
of
Drawing No.
Date:

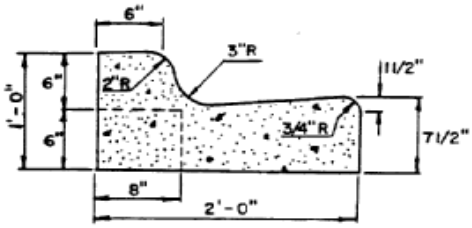

CURB & GUTTER DETAIL
N.T.S

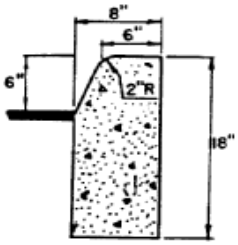

VERTICAL CURB DETAIL
N.T.S

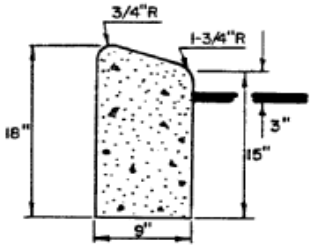

MOUNTABLE CURB DETAIL
N.T.S

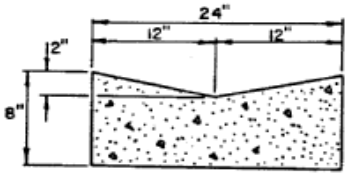

VALLEY GUTTER DETAIL
N.T.S

City of Marco Island
Public Right-of-Way Construction Standards Handbook

Curb & Gutter Details

Sheet No. 2
of
Drawing No.
Date:

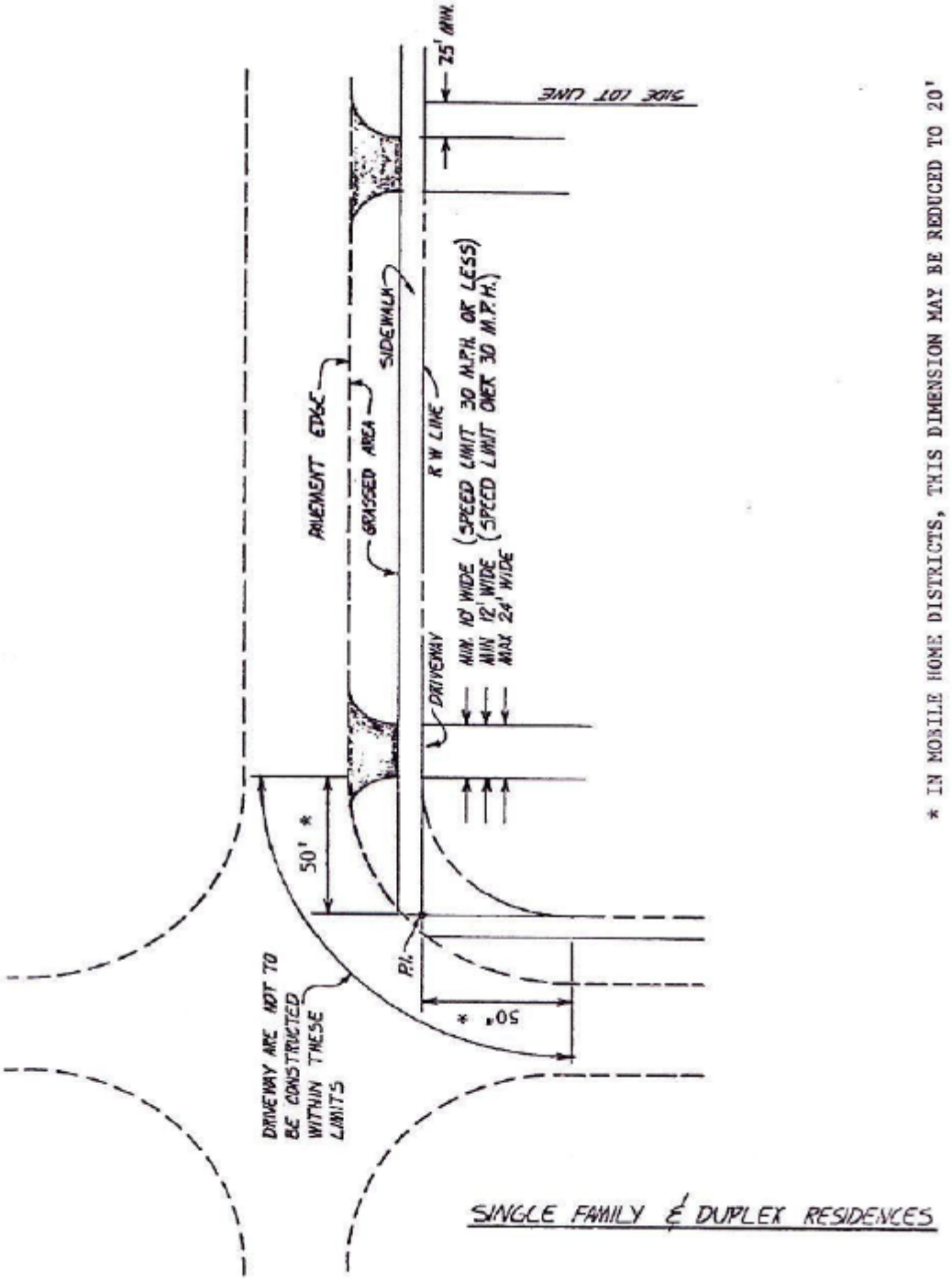

STANDARD ROAD DETAIL

City of Marco Island
Public Right-of-Way Construction Standards Handbook

Single Family and Duplex Driveways

Sheet No. 3
of
Drawing No.
Date:

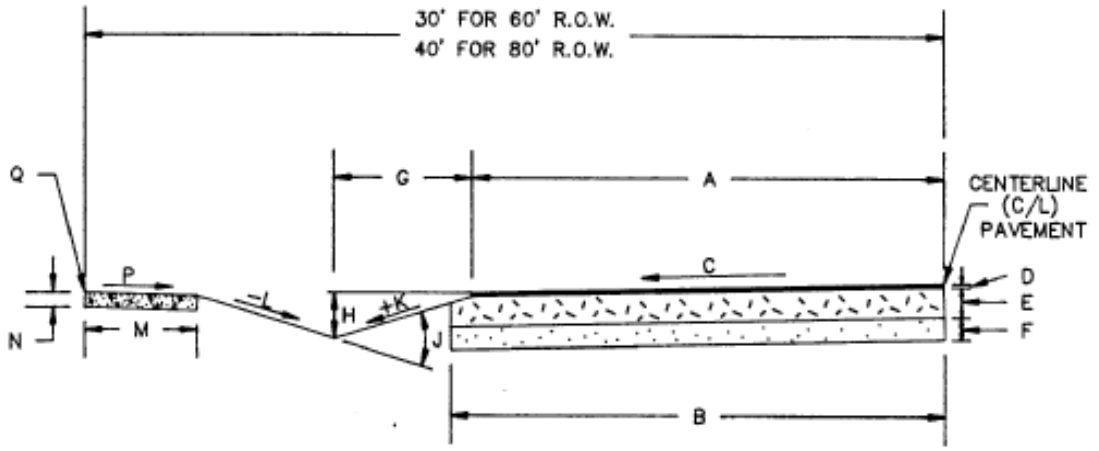

RECOMMENDED CRITERIA

CROSS SECTION ELEMENTS	LOCAL STREET	COLLECTOR STR
A 1/2 OF PAVEMENT WIDTH	10' [a]	13'
B 1/2 OF BASE WIDTH	11'	14'
C PAVEMENT CROSS SLOPE	1/4"/FT [b]	1/4"/FT [b]
D TYPE II ASPHALTIC CONCRETE THICKNESS	1"	1 1/4"
E LIMEROCK BASE THICKNESS	6"	8"
F STABILIZED SUBGRADE THICKNESS	12"	12"
G C/L SWALE TO EDGE OF PAVEMENT	6'	
H SWALE DEPTH	0.2' to 0.4'	
J ALGEBRAIC DIFFERENCE IN SWALE GRADES	≤ 12% [c]	
K SWALE GRADE NEAR PAVEMENT	MAX 6%	
L SWALE GRADE NEAR SIDEWALK	MAX 6%	
M CONCRETE SIDEWALK WIDTH	5' [d]	
N CONCRETE SIDEWALK THICKNESS	4" [e]	
P CONCRETE SIDEWALK CROSS SLOPE	1/4"/FT	
Q BACK OF SIDEWALK ELEVATION	APPROX EQUAL TO C/L PAVEMENT ELEVATION	

NOTES:
- a MIN 9' IN RESURFACING PROJECTS
- b MIN 1/8"/FT AND MAX 1/2"/FT IN RESURFACING PROJECTS
- c REFER ITE "RECOMMENDED GUIDELINES FOR SUBDIVISION STREETS", 1984, SECTION 2.03.18
- d 8' IN CERTAIN CASES; REFER TYPICAL SIDEWALK DETAIL, SHEET 8
- e 6" THICK CONCRETE SIDEWALK WITH WIRE MESH (AT ALLEY INTERSECTION AND DRIVEWAYS)

City of Marco Island
Public Right-of-Way Construction Standards Handbook

Swale Cross-Section Detail

Sheet No. 4
of
Drawing No.
Date:

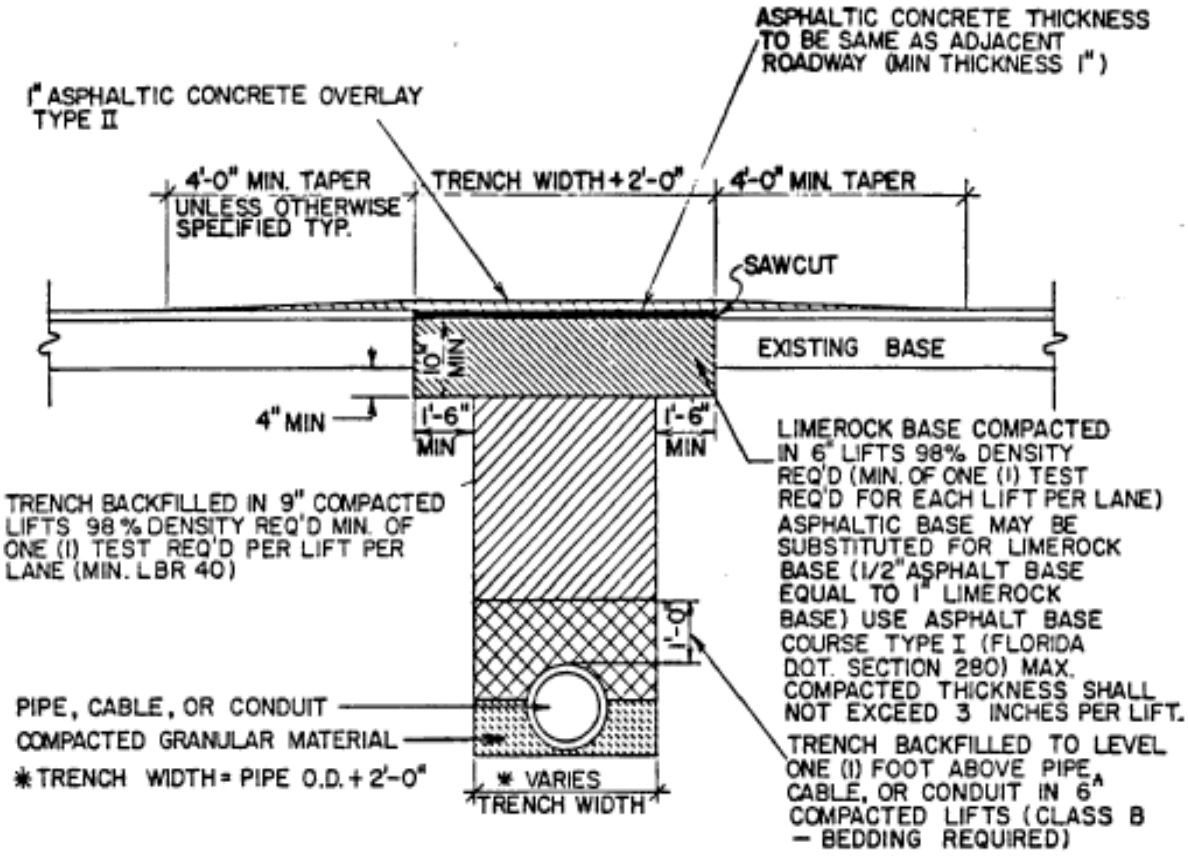

NOTES: 1) ALL PROCTOR AND DENSITY TESTS SHALL BE TAKEN BY A CERTIFIED LABORATORY
2) ALL TESTS SHALL BE COMPLETED AND MEET MINIMUM DENSITY REQUIREMENTS PRIOR TO ADDITIONAL BACK-FILLING

City of Marco Island
Public Right-of-Way Construction Standards Handbook
Pavement Trench Restoration Detail

Sheet No. 5
of
Drawing No.
Date:

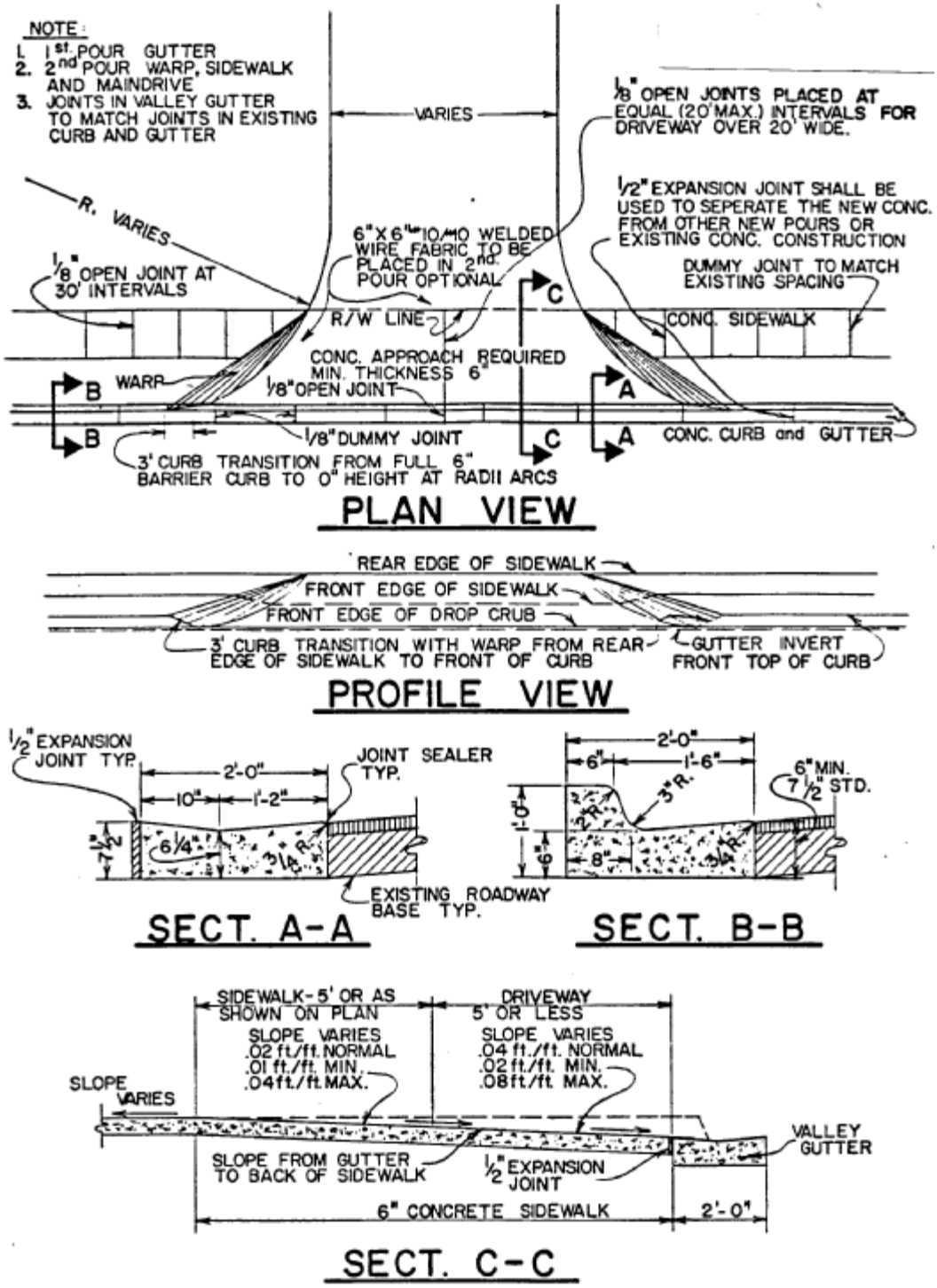

City of Marco Island
Public Right-of-Way Construction Standards Handbook

Urban Turnout / Driveway Detail

Sheet No. 6
of
Drawing No.
Date:

CITY OF NAPLES ENGINEERING DEPARTMENT
TRAFFIC IMPACT STUDY REQUIREMENTS FORM

DATE: _____

PROJECT NAME _____ LOCATION _____

DEVELOPER	TRAFFIC CONSULTANT	CITY	APPROVAL PROCESS
COMPANY	COMPANY	CITY ENGINEER	CITY
CONTACT	PROJECT ENGINEER		FDOT
PHONE	PHONE	(813) 434-4655 PHONE	OTHER

SITE AREA (ACRES):	TIS CLASSIFICATION: MINOR OR MAJOR

TRAFFIC STUDY FOR:		CONTENT OF REPORT TO INCLUDE			METHOD
			SITE IMPACTS	STUDY AREA IMPACTS	
ZONING		LANE USE DESCRIPTION			
PLATTING		TRIP GENERATION (+ REDUCTION FACTORS)			
BUILDING PERMIT		TRIP DISTRIBUTION/ TRIP ASSIGNMENT			
DRIVEWAY PERMIT OR RIGHT OF WAY PERMIT					
ANNEXATION					

	STREET AVERAGE DAILY TRAFFIC - PEAK SEASON							
INTERSECTION CAPACITIES TO BE ANALYZED*	PEAK SEASON PEAK PERIODS				ARTERIAL STREET SEGMENT CAPACITIES TO BE ANALYZED*	PROJECTION		
	A.M.	NOON	P.M.	OTHER	STREET AVERAGE DAILY TRAFFIC - PEAK SEASON	EXISTING	BUILD OUT	20 YR.

* FOR EXISTING AND BUILT OUT CONDITIONS.

TRAFFIC CONSULTANTS MUST MEET WITH CITY STAFF TO COMPLETE FORM. TRAFFIC STUDIES SUBMITTED WITHOUT FORM BEING COMPLETED PRIOR TO STUDY MAY NOT BE ACCEPTED. ALL STUDIES MUST CONFORM TO CITY ORDINANCE.

STUDY AREA DEFINITION (SEE MAP IF ATTACHED): _____

STUDY AREA RADIUS (MILES): _____

21

City of Marco Island
Public Right-of-Way Construction Standards Handbook

Traffic Impact Study Requirements Form

Sheet No. 7
of
Drawing No.
Date:

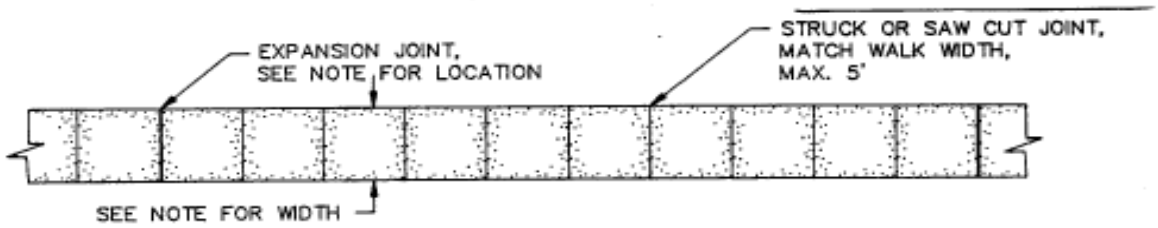

TYPICAL SIDEWALK PLAN

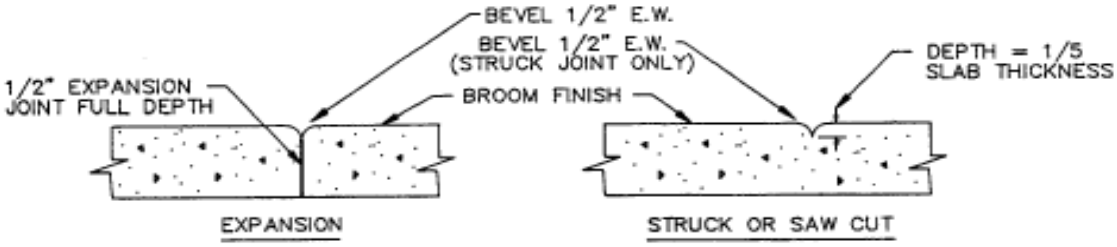

JOINT DETAILS

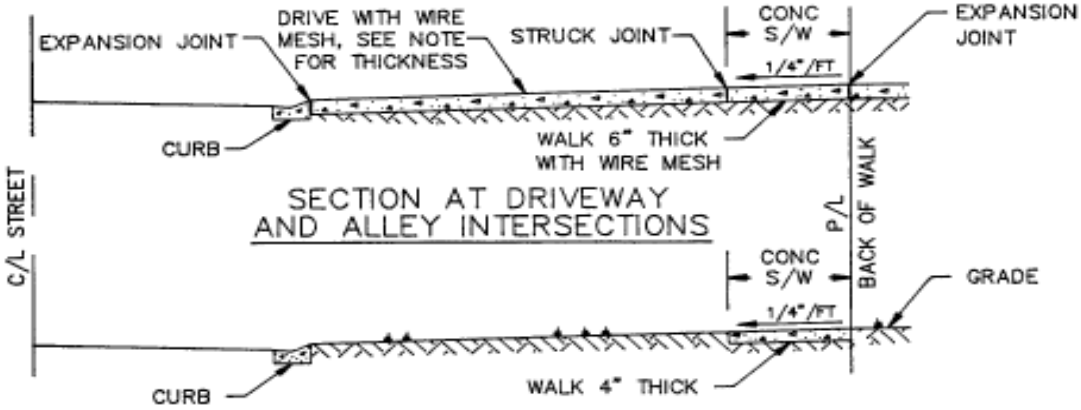

SECTION AT DRIVEWAY AND ALLEY INTERSECTIONS

SECTION AT SIDEWALK

NOTES:

1. MIN. 1/4" PER FOOT RISE, BACK OF CURB TO BACK OF WALK. WHERE NO CURB EXISTS, SIDEWALK TO BE SET TO GRADE ESTABLISHED BY ENGINEERING DEPARTMENT.
2. ALL CONCRETE SHALL CONFORM TO A.S.T.M. C-150, LATEST SPECIFICATION, AND ATTAIN A COMPRESSIVE STRENGTH OF 3,000 P.S.I. AT 28 DAYS.
3. SIDEWALK EXPANSION JOINTS TO BE AT ALL TIES TO CONCRETE OTHER THAN DRIVEWAYS. MAXIMUM SPACING SHALL BE 40'.
4. EXPANSION JOINT MATERIAL SHALL BE ASPHALT FIBER IMPREGNATED PREFORMED JOINT FILLER, TO FULL DEPTH OF CONCRETE.
5. WIDTH OF SIDEWALK IN RESIDENTIAL AREAS TO BE 5'-0". WIDTH OF SIDEWALK IN COMMERCIAL/INDUSTRIAL AREAS TO BE 8'-0".
6. CONCRETE DRIVEWAY SERVING A SINGLE FAMILY UNIT OR DUPLEX TO BE MIN. 4" THICK. CONCRETE DRIVEWAY SERVING OTHER THAN A SINGLE FAMILY UNIT OR DUPLEX TO BE MIN. 6" THICK

City of Marco Island
Public Right-of-Way Construction Standards Handbook

Sidewalk Construction Details

Sheet No. 8
of
Drawing No.
Date:

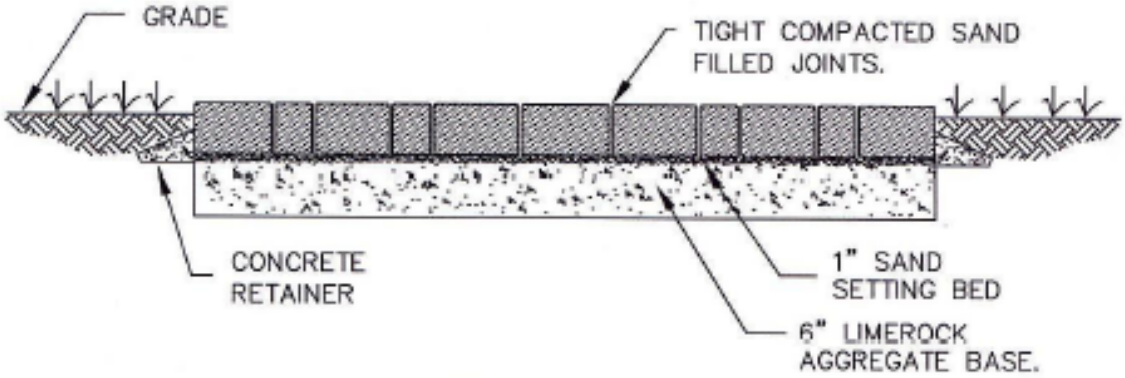

PAVER DRIVE DETAIL

City of Marco Island
Public Right-of-Way Construction Standards Handbook

Single Family and Duplex Driveway

Sheet No. 9
of
Drawing No.
Date:

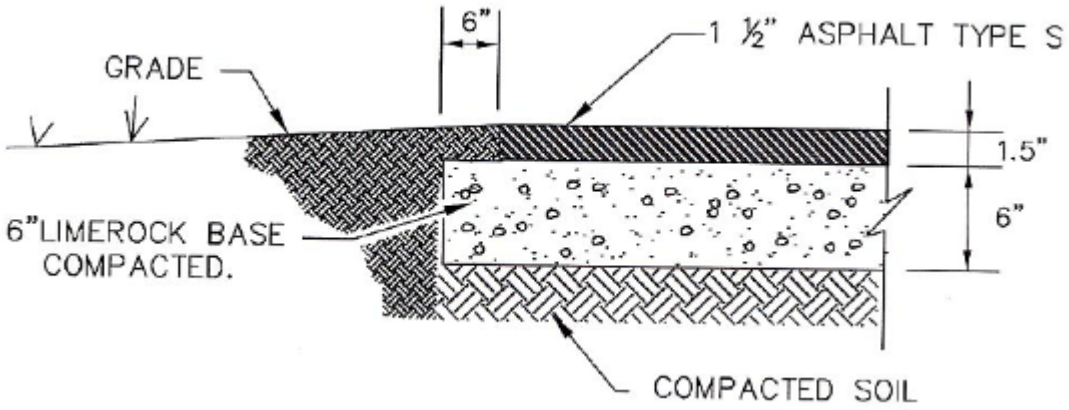

ASPHALT DRIVE DETAIL

N.T.S.

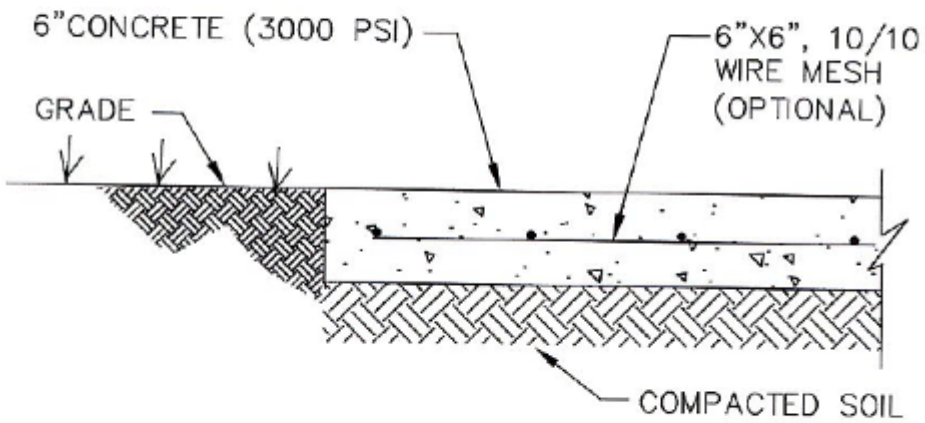

CONCRETE DRIVE DETAIL

N.T.S.

City of Marco Island
Public Right-of-Way Construction Standards Handbook

Driveway Construction Details

Sheet No. 10
of
Drawing No.
Date:

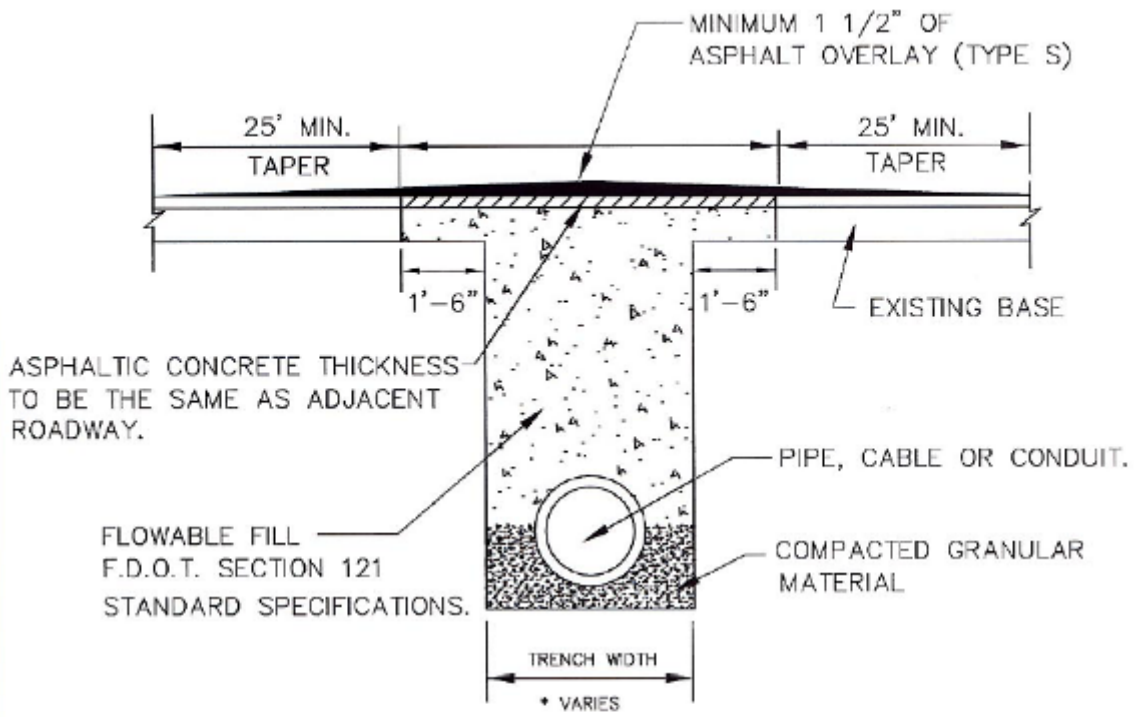

OPEN CUT RESTORATION DETAIL

N.T.S.

NOTE

– WRAP PIPE JOINTS WITH
FILTER FABRIC.

* TRENCH WIDTH = PIPE O.D. + 2.0'

PLOT DATE 4/10/03

City of Marco Island
Public Right-of-Way Construction Standards Handbook

Pavement Trench Restoration Detail

Sheet No. 11
of
Drawing No.
Date:

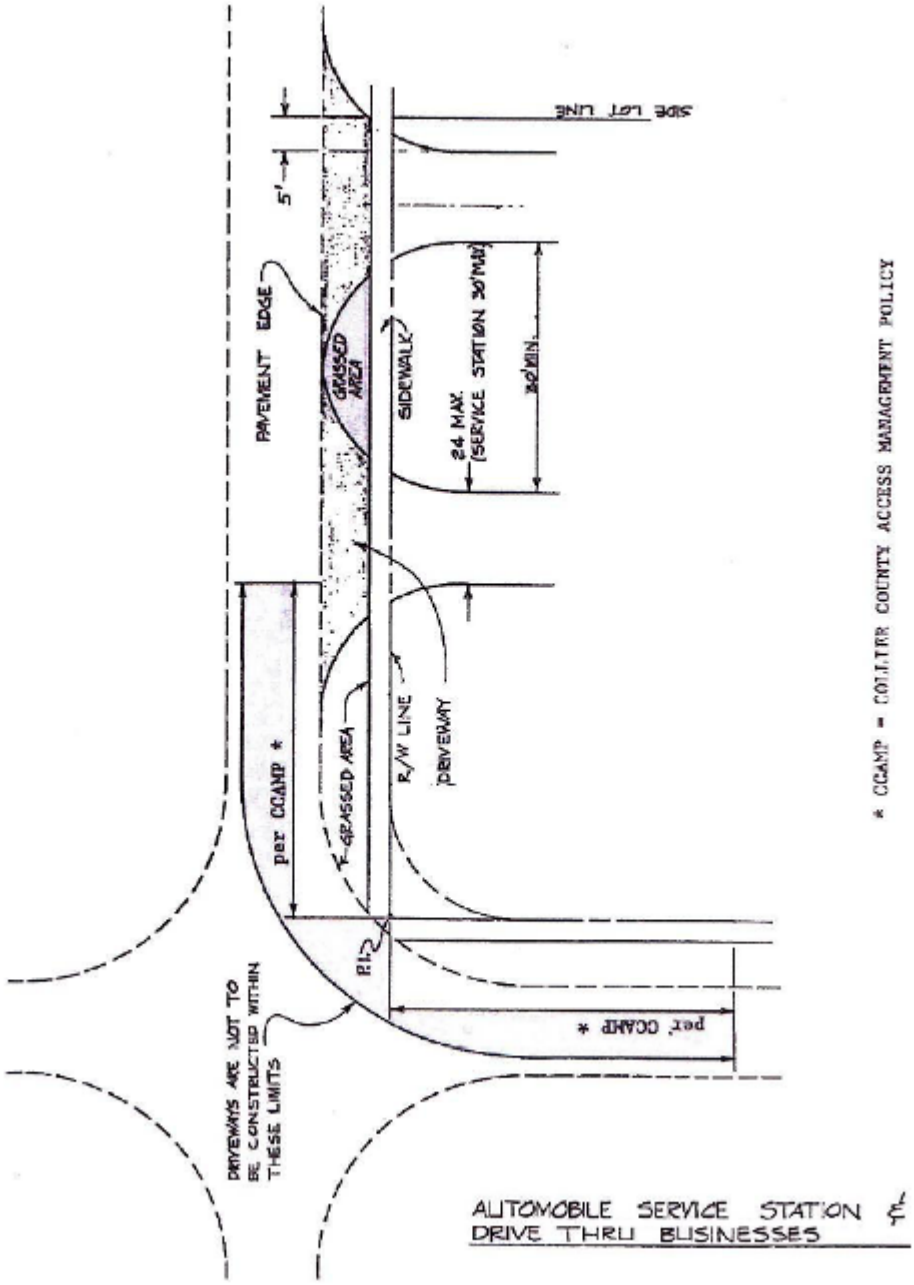

City of Marco Island
Public Right-of-Way Construction Standards Handbook

Auto Service Station & Drive Thru

Sheet No. 12
of
Drawing No.
Date:

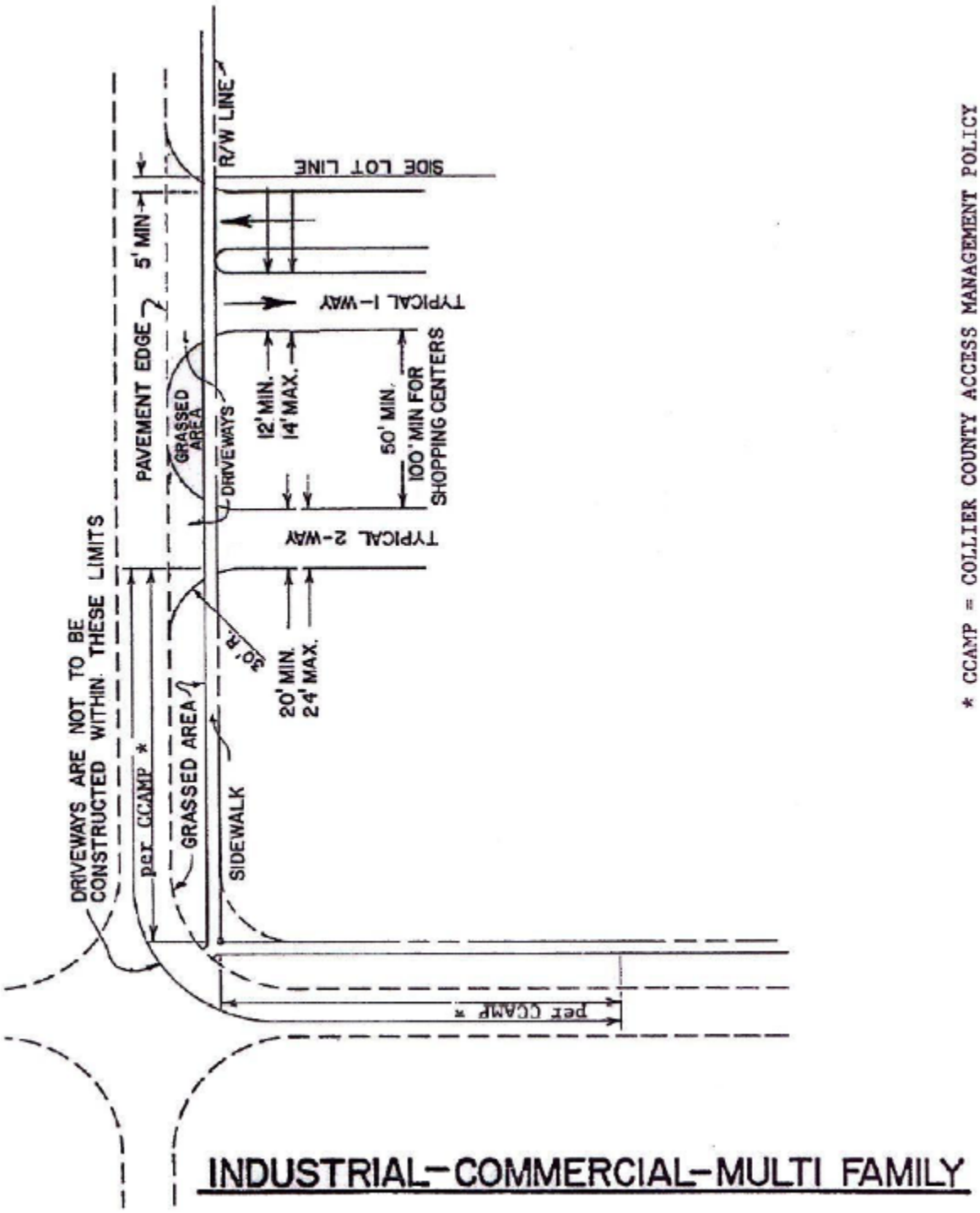

* CCAMP = COLLIER COUNTY ACCESS MANAGEMENT POLICY

INDUSTRIAL-COMMERCIAL-MULTI FAMILY

City of Marco Island
Public Right-of-Way Construction Standards Handbook

Industrial-Commercial-Multi Family

Sheet No. 13
of
Drawing No.
Date:

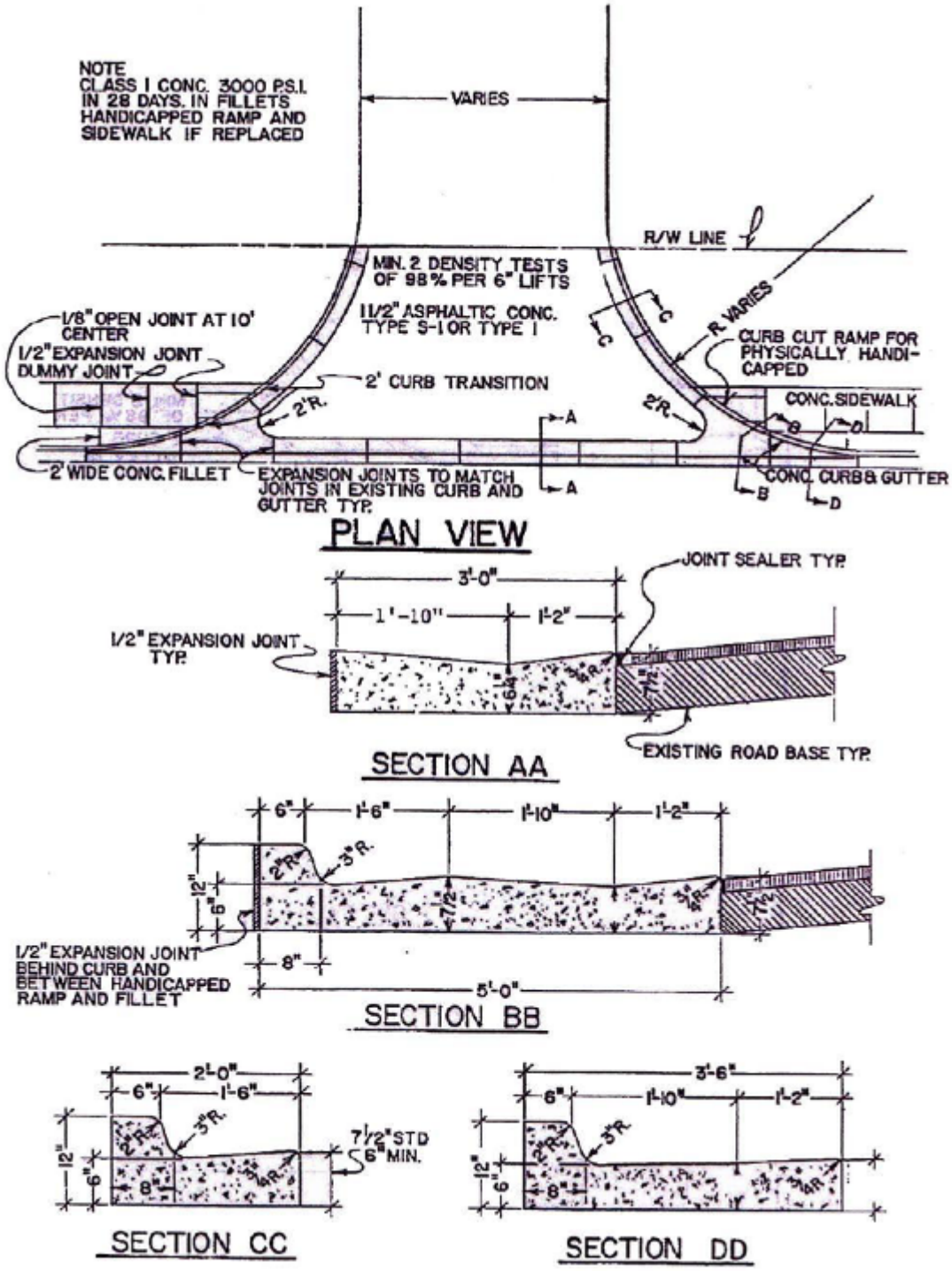

City of Marco Island
Public Right-of-Way Construction Standards Handbook

Curb & Gutter Driveway Detail

Sheet No. 14
of
Drawing No.
Date:

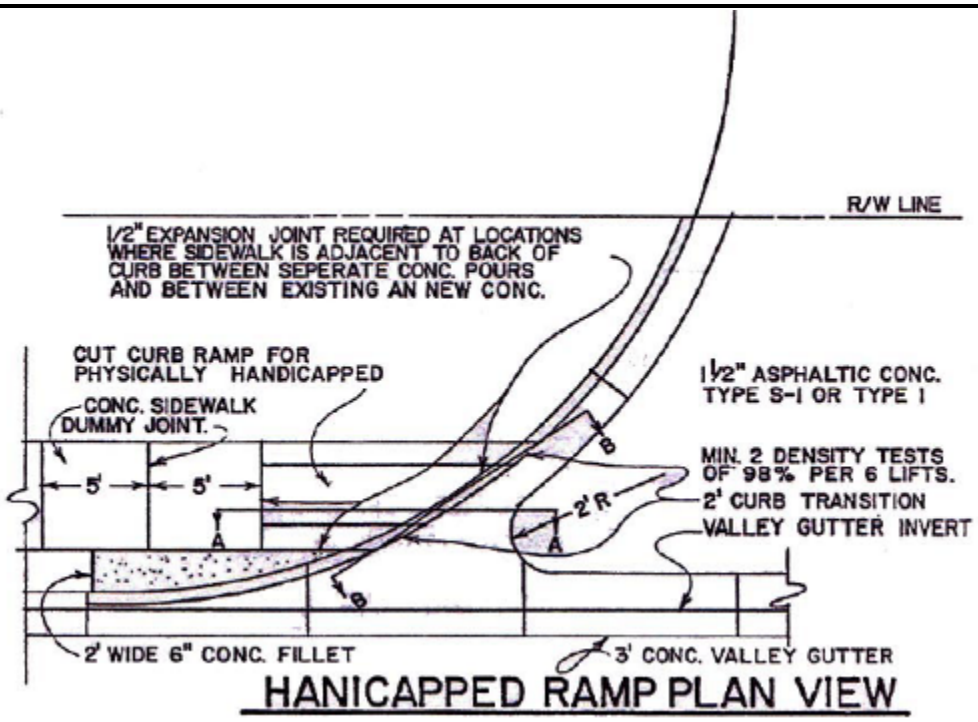

HANICAPPED RAMP PLAN VIEW

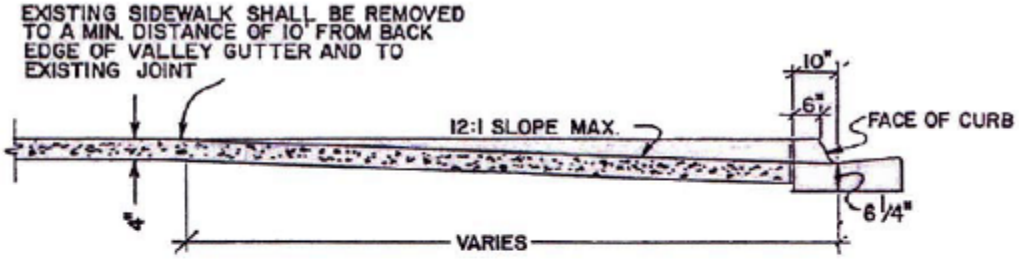

SECTION AA

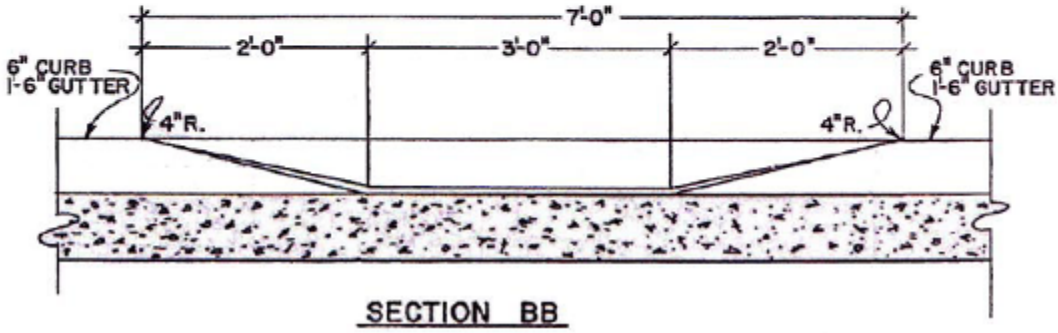

SECTION BB

City of Marco Island
Public Right-of-Way Construction Standards Handbook
Sidewalk Handi-cap Ramp Details

Sheet No. 15
of
Drawing No.
Date:
Scale: NTS

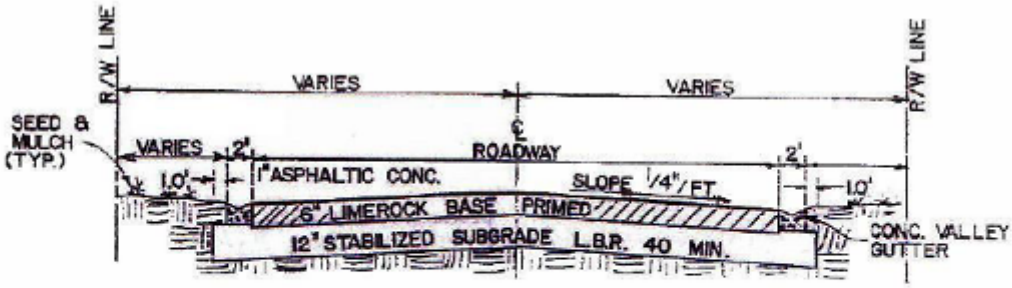

TYPICAL ROAD SECTION
N.T.S.

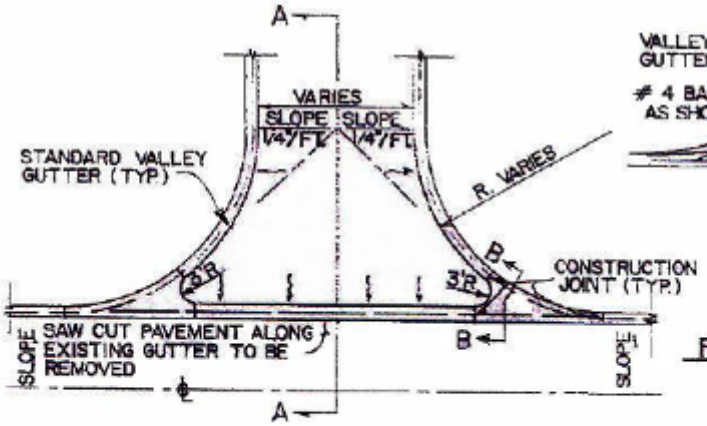

PLAN VIEW
STANDARD VALLEY GUTTER CROSSING
N.T.S.

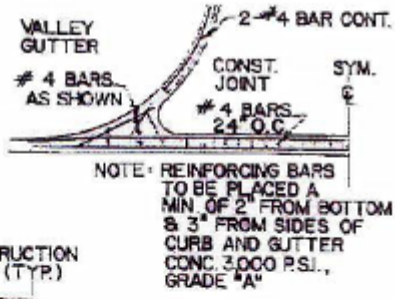

REINFORCING DIAGRAM
N.T.S.

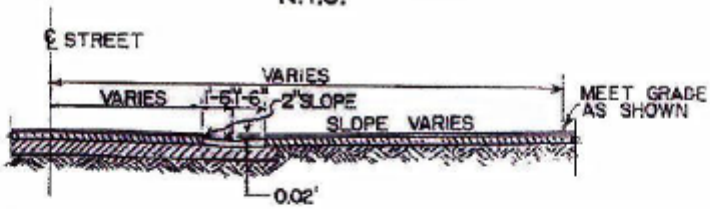

SECTION A-A
N.T.S.

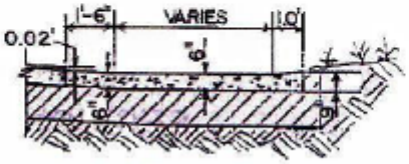

SECTION B-B
N.T.S

City of Marco Island
Public Right-of-Way Construction Standards Handbook

Curbed Intersection Construction

Sheet No. 16
of
Drawing No.
Date:

DIMENSIONS								
D	A	B	C	E	F	G	H	M Single Pipe
15"	2.27'	4.09'	6.36'	4.03'	8'	1.22'	4.0'	4.63'
18"	2.36'	5.12'	7.48'	5.03'	9'	1.41'	4.0'	4.92'
24"	2.53'	7.18'	9.71'	7.03'	11'	1.73'	4.0'	5.50'
30"	2.70'	9.25'	11.95'	9.03'	13'	2.00'	4.0'	6.08'
36"	2.87'	11.31'	14.18'	11.03'	15'	2.24'	4.0'	6.67'
42"	3.05'	13.37'	16.42'	13.03'	17'	2.45'	4.0'	7.25'
48"	3.22'	15.43'	18.65'	15.03'	19'	2.65'	4.0'	7.83'
54"	3.39'	17.49'	20.88'	17.03'	21'	2.83'	4.0'	8.42'
60"	3.56'	19.55'	23.11'	19.03'	23'	3.00'	4.0'	9.00'

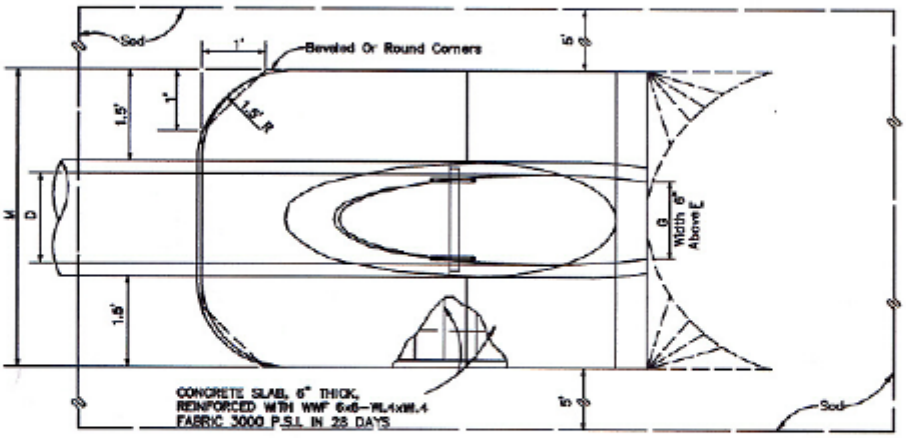

TOP VIEW—SINGLE PIPE

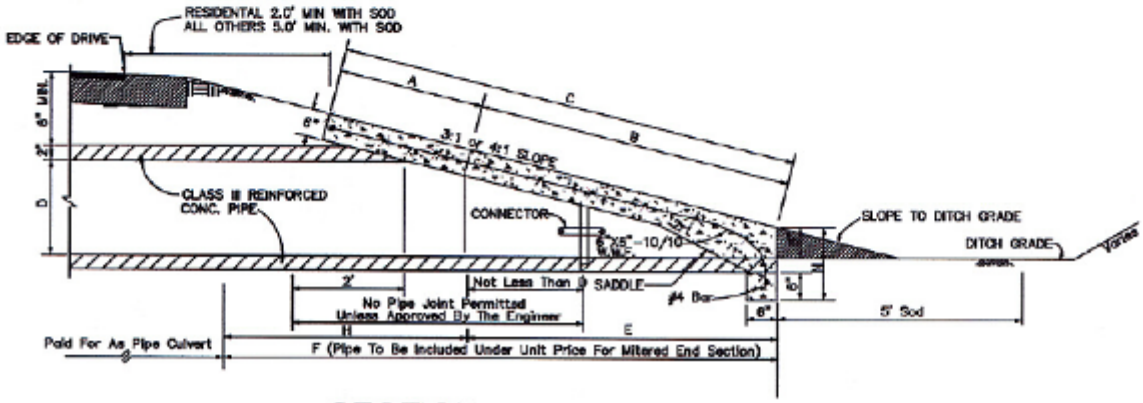

SECTION

City of Marco Island
Public Right-of-Way Construction Standards Handbook

Concrete Mitered End Section Details

Sheet No. 17
of
Drawing No.
Date:

DIMENSIONS								
D	A	B	C	E	F	G	H	M Single Pipe
15"	2.5'	3.09'	5.59'	3.0'	7.0'	1.23'	4.0'	4.33'
18"	2.5'	4.12'	6.62'	4.0'	8.0'	1.41'	4.0'	4.58'
24"	2.5'	6.18'	8.68'	6.0'	10.0'	1.73'	4.0'	5.08'
30"	2.5'	8.25'	10.75'	8.0'	12.0'	2.00'	4.0'	5.58'
36"	2.5'	10.31'	12.81'	10.0'	14.0	2.24'	4.0'	6.08'
42"	2.5'	12.37'	14.87'	12.0'	16.0'	2.45	4.0'	6.58'
48"	2.5'	14.43'	16.93'	14.0'	18.0'	2.65'	4.0'	7.08'
54"	2.5'	16.49'	18.99'	16.0'	20.0'	2.83'	4.0'	7.58'
60"	2.5'	18.55'	21.05'	18.0'	22.0'	3.00'	4.0'	8.08'

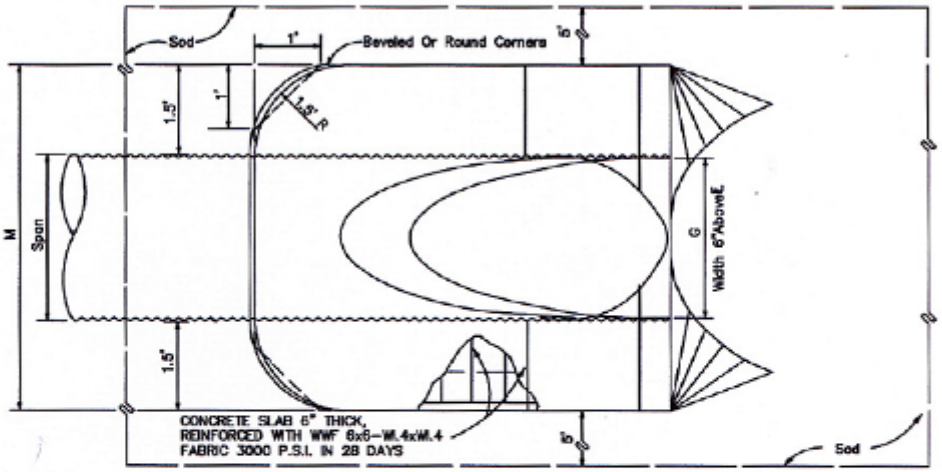

TOP VIEW—SINGLE PIPE

NOTES:
1. UNDER DRIVE ACCESS 1.0' MIN. COVER OR AS RECOMMENDED BY CULVERT MANUFACTURER
2. IF 1.0' MIN. COVER CANNOT BE ATTAINED R.C.P. R.C.P.A. SHALL BE USED

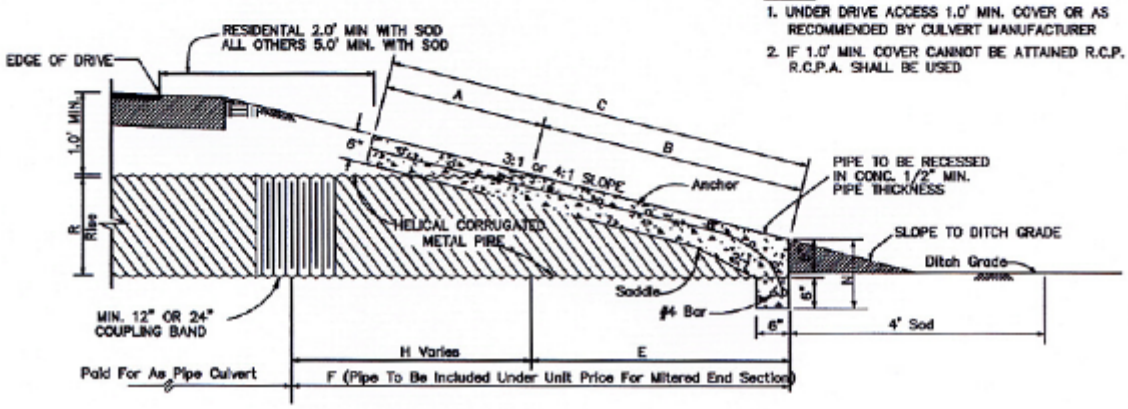

SECTION

City of Marco Island
Public Right-of-Way Construction Standards Handbook
Concrete Mitered End Section Details

Sheet No.18
Drawing No.
Date:
Scale: NTS

DIMENSIONS									
RISE R	SPAN S	A	B	C	E	F	G	H	M Single Pipe
12"	18"	2.36'	3.06'	5.42'	3.03'	5'	1.50'	2.0'	4.92'
14"	23"	2.44'	3.75'	6.19'	3.70'	6'	1.90'	2.3'	5.38'
19"	30"	2.62'	5.47'	8.09'	5.36'	8'	2.37'	2.6'	6.04'
24"	38"	2.79'	7.18'	9.97'	7.03'	10'	2.85'	3.0'	6.79'
29"	45"	3.05'	8.90'	11.95'	8.70'	12'	3.19'	3.3'	7.50'
34"	53"	3.22'	10.62'	13.81'	10.36'	13'	3.57'	2.6'	8.25'
38"	60"	3.39'	11.99'	15.38'	11.70'	15'	3.95'	3.3'	8.92'
43"	68"	3.56'	13.71'	17.27'	13.36'	17'	4.28'	3.6'	9.67'
48"	76"	3.73'	15.43'	19.16'	15.03'	19'	4.59'	4.0'	10.42'
53"	83"	3.91'	17.15'	21.06'	16.70'	20'	4.77'	3.3'	11.08'
58"	91"	4.08'	18.87'	22.95'	18.36'	22'	5.01'	3.6'	11.83'

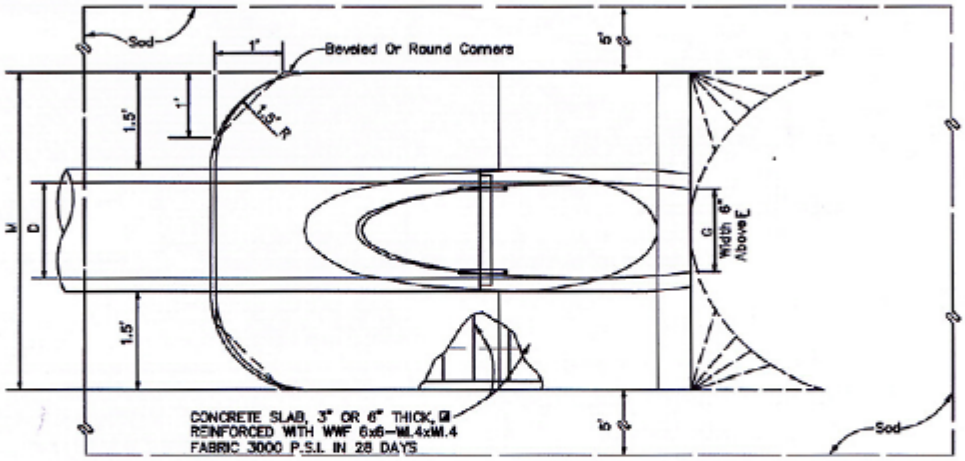

TOP VIEW—SINGLE PIPE

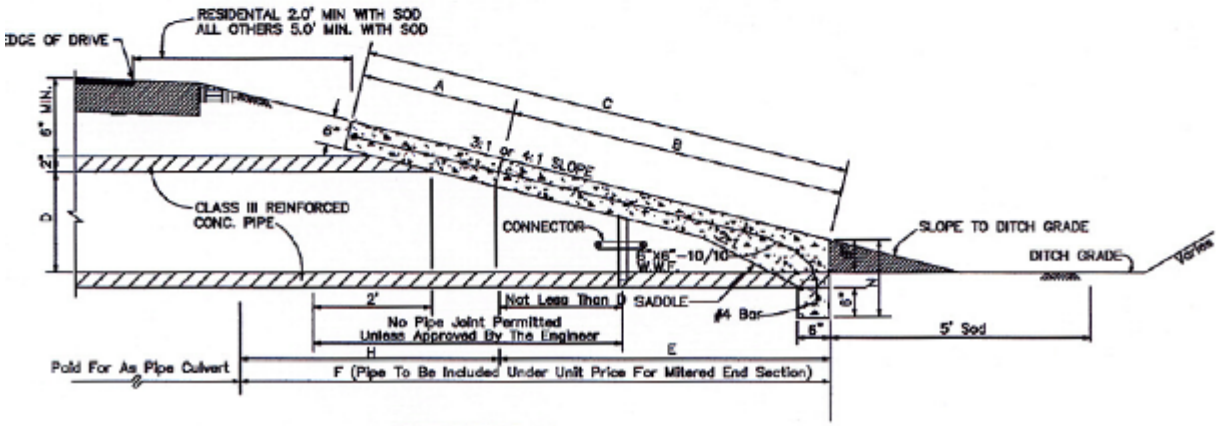

SECTION

City of Marco Island
Public Right-of-Way Construction Standards Handbook

Concrete Mitered End Section Details

Sheet No. 19
of
Drawing No.
Date:
Scale: NTS

DIMENSIONS										
RISE R	SPAN S	X	A	B	C	E	F	G	H	M Single Pipe
17"	13"	2'-6"	2.5'	2.41'	4.91'	2.33'	7'	1.39'	4.7'	4.50'
21"	15"	2'-10"	2.5'	3.09'	5.59'	3.00'	8'	1.76'	5.0'	4.83'
28"	20"	3'-5"	2.5'	4.81'	7.31'	4.67'	9'	2.22'	4.3'	5.42'
35"	24"	4'-0"	2.5'	6.18'	8.68'	6.00'	11'	2.55'	5.0'	6.00'
42"	29"	4'-9"	2.5'	7.90'	10.40'	7.67'	12'	2.97'	4.3'	6.58'
49"	33"	5'-6"	2.5'	9.28'	11.78'	9.00'	14'	3.34'	5.0'	7.17'
57"	38"	6'-4"	2.5'	11.00'	13.50'	10.67'	16'	3.65'	5.3'	7.83'
64"	43"	7'-1"	2.5'	12.71'	15.21'	12.33'	17'	3.89'	4.7'	8.42'
71"	47"	7'-10"	2.5'	14.09'	16.59'	13.67'	19'	4.14'	5.3'	9.00'

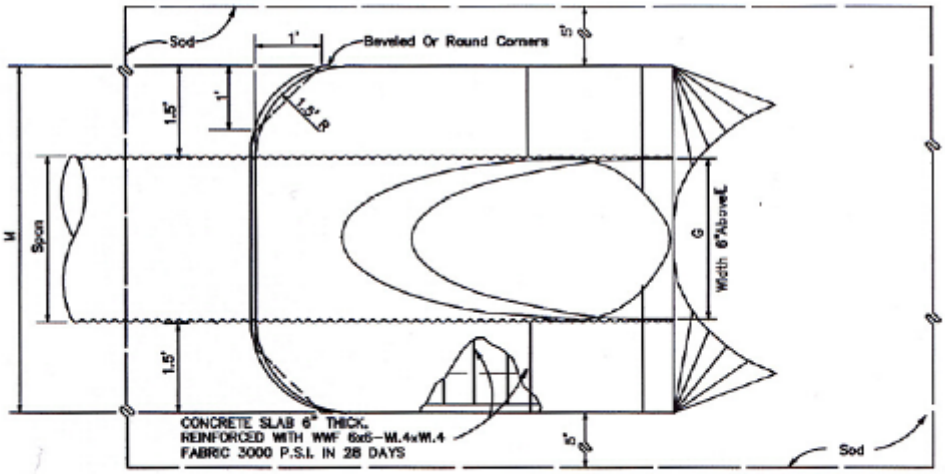

TOP VIEW-SINGLE PIPE

NOTES:
1. UNDER DRIVE ACCESS 1.0' MIN. COVER OR AS RECOMMENDED BY CULVERT MANUFACTURER
2. IF 1.0' MIN. COVER CANNOT BE ATTAINED R.C.P. R.C.P.A. SHALL BE USED

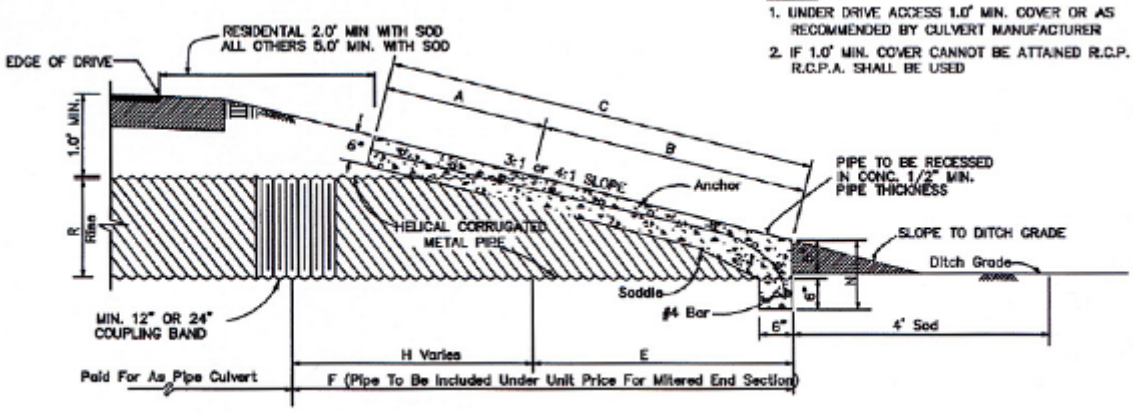

SECTION

City of Marco Island
Public Right-of-Way Construction Standards Handbook

Concrete Mitered End Section Details

Sheet No. 20
of
Drawing No.
Date:

APPENDIX A

CITY OF MARCO ISLAND
PUBLIC WORKS DEPARTMENT

RECOMMENDED MINIMUM PRACTICES FOR RIGHT-OF-WAY LANDSCAPING AND IRRIGATION MAINTENANCE

1. Notwithstanding any requirements or mandates set forth in the City code or any ordinance, the technical provisions and specifications set forth herein are intended to provide information by which private entities (i.e., permittees) may understand the City of Marco Island' recommended minimum practices for maintenance of landscaping and irrigation improvements within public right-of-way and easements. Records of all final landscape and irrigation specification requirements that are issued by the City under individual right-of-way construction permits shall be retained and maintained by Permittees and made available to the City's representative upon request.

2. Mowing and Edging: Mowing and edging activities and locations shall include medians as well as roadside areas such as along swales and the outside edges of sidewalks abutting adjacent properties. All turf surfaces shall be mowed with mulching type mower equipment to eliminate the need to bag and transport grass clippings. Should bagging become necessary due to mechanical failure, weather conditions or related temporary circumstances the bagged clippings shall be collected and appropriately disposed in accordance with City regulations. Grass shall be mowed at a height between three (3) and four (4) inches. The approximate frequency of mowing shall be on a weekly basis or fifty-two (52) times per year.

    a. Mechanical edging of turf surfaces shall be done with each mowing along all sidewalk edges, back of concrete curbs, around all planting beds, utility service boxes, street light bases, sign posts, headwalls, guardrails, timer pedestals, drainage culverts and structures, fences, walls, trees and similar site features. Metal blade or mechanical edging is not permitted at locations that could damage underground utility lines. Grass root runners extending into mulched areas shall be cut and removed when the edging is performed. Edging is also required in all turf areas around isolated trees, sprinkler heads, valve boxes, shrubs and manholes. No herbicide shall be used for edging.

    b. All sidewalks, street curbing or drainage gutters shall be cleaned after each mowing and edging activity. All sidewalks shall be kept clean but no clippings or other debris shall be blown or allowed to be deposited on other adjacent property or accumulate on right-of-way areas. All debris on streets, sidewalks and other areas within or adjacent to the right-of-way resulting from edging activities shall be removed and appropriately disposed in accordance with City regulations.

3. Sprinkler Placement - Requirements in Public Right-of-Way:

   a. A licensed contractor or other authorized agent of a permittee must submit an application and secure a right-of-way construction permit to perform irrigation installation work or maintenance of irrigation systems in public right-of-way and easements. Appropriate drawings for proposed sprinkler or drip irrigation systems shall be submitted containing complete material specifications and the following minimum dimensions and related information:

      i. Centerline of traveled way to property line/right-of-way line.

      ii. Edge of pavement to the nearest proposed irrigation line.

      iii. Property lines to irrigation feeder lines.

      iv. Edge of pavement to drainage swale centerline.

      v. Swale centerline to all nearest proposed irrigation lines.

      vi. Edge of pavement to property line/right-of-way line.

      vii. Irrigation line installation to sidewalk/ bikeway (where applicable).

      viii. Width of driveway(s) and distance to side property line(s).

      ix. Size and depth of proposed irrigation lines and sprinkler heads.

      x. Street name and address information and the subdivision name (including lot, block, and unit numbers).

      xi. Irrigation sprinkler heads shall be placed a minimum of six (6) inches away from a sidewalk / bikeway edge. Exceptions to these standards will be allowed for urban street sections and for existing and future sidewalk locations.

      xii. PVC irrigation conduit and other pipes shall be pushed and not jetted under sidewalks at a minimum depth of seven (7) inches measured from the topside of the functional sidewalk / bikeway surface.

      xiii. PVC irrigation conduit and other pipes proposed for installation beneath commercial or public driveways shall be pushed at a minimum depth of twenty (20) inches measured from the topside of the functional driveway surface.

      xiv. PVC irrigation conduit and other pipes proposed for installation beneath private driveways shall be pushed at a minimum depth of nine

(9) inches measured from the topside of the functional driveway surface.

xv. Drawings shall be complete in content clearly depicting all work that will be performed by the permittee in right-of-way and easements.

xvi. Discharge of water spray from sprinkler systems shall be directed away from the traveled way and sidewalks / bikeways.

xvii. The permittee is responsible to operate and maintain the irrigation/sprinkler system in accordance with specifications herein.

xviii. Whenever necessary for construction, repair, maintenance, expansion, alteration or improvement of public right-of-way, as determined and authorized by the City Public Works Director, each affected property owner (i.e., permittee) shall have sprinkler systems or conflicting components thereof permanently or temporarily removed from the right-of-way and reset or relocated thereon at the sole expense of the permittee or abutting property owner.

4. Weeding: Eradication and removal of weed growth in plant beds, sidewalk areas (asphalt, concrete or pavers), guardrail bases, curb and gutter joints as well as other similar locations such as mulched areas shall be performed by chemical or manual means. The removal of weeds shall be accomplished on a weekly basis or as necessary to provide a weed free and well-maintained area.

5. General Site Pruning: General site pruning shall be defined as the pruning of any plant's foliage below a pruning datum line that is measured ten (10) feet above the existing or proposed ground level or finished grade.

    a. All groundcover, shrubby, canopy trees, palm trees and similar landscaping between ground level or finished grade and the ten (10) foot pruning datum line shall be inspected and pruned on a weekly or as needed basis to maintain the proper or required visibility heights for safe sight distance for vehicular and pedestrian movements, and the desired shape or form shall be accomplished in accordance with standard industry practice or as determined by the City's representative. Pruning shall also include removal of water sprouts, suckers and any dead or diseased foliage or branches.

    b. On an as-required frequency, ornamental grasses such as Fountain Grass, Florida Gamma or Fakahatchee Grass shall be pruned in a pyramidal shape to a twelve (12) inch or twenty-four (24) inch height based upon the type of plant. Ornamental type grasses such as Liriope Muscari 'Evergreen Giant' shall only be pruned at the direction and approval of the City's representative or by a qualified and licensed landscape maintenance contractor.

    c. Plant material and trees with a canopy over pedestrian sidewalks and bikeways shall be maintained at a minimum height of one hundred twenty (120) inches

above the existing or proposed ground level or finished grade. Shrubbery and groundcover adjacent to pathways and sidewalks shall be pruned to maintain a minimum one (1) foot horizontal clearance from the edge of pathways and sidewalks. It is recommended that adjacent shrubs and groundcovers be maintained so that they deflect away or are rounded away from pathways and sidewalks.

6. Trash Removal: All right-of-way sites shall be maintained in a clean and aesthetically pleasing condition by removing all trash or debris including but not limited to paper, bottles, cans, miscellaneous waste and horticultural debris. All debris and trash shall be removed upon turf surfaces prior to initiating turf-mowing operations.

    a. The end disposal or final destination for all trash and debris resulting from landscape maintenance activities shall be at a properly authorized landfill or waste disposal facility.

7. Street Cleaning/Sweeping: A four (4) foot wide strip of motor vehicle lanes parallel to the centerline of a road or alleyway, with such width being measured either from the edge of street pavements or from the face of street curb and gutters including turn lanes, shall be cleaned with each landscape mowing/maintenance activity including the removal of any accumulated debris or objectionable growth so as to maintain an aesthetically pleasing and safe street condition.

8. Traffic Control: Permittees and landscape maintenance contractors shall comply with City regulations pertaining to minimum requirements for maintenance of traffic control measures for work performed within public right-of-way (i.e., Section 8 of this Handbook) and also the various standards and criteria promulgated by FDOT.

    a. Permittees are responsible to obtain copies and become familiar with all FDOT maintenance of traffic control manuals, drawings, specifications and related documents. Strict adherence to FDOT traffic control standards and design criteria will be enforced under authorized right-of-way construction permits. To assist in achieving safe visibility of workers within public right-of-way, all persons undertaking landscape construction or maintenance activities shall wear FDOT approved and certified high visibility (i.e., bright day glow red/orange colored) safety vests.

9. Canopy Tree and Palm Pruning: For the purposes of this Handbook canopy trees are defined as any large shrub, tree or palm with foliage extending above or higher than the ten (10) foot pruning datum line.

    a. All canopy trees and palms shall be pruned on an as-needed frequency to create and maintain a seventeen (17) foot canopy clearance over roadways and a ten (10) foot canopy clearance over all sidewalks, pathways and bikeways. Canopy trees shall be selectively pruned to thin the interior canopy of cross branches and to shape the overall canopy or envelope of the trees. The City's representative shall approve the person or persons assigned to perform pruning activities with the condition that such individuals prune canopy

trees and palms only under the direction of a Licensed Landscape Architect, Arborist, Tree Surgeon or other approved licensed landscape related professional. Pruning work shall be performed in accordance with specifications set forth under ANSI AS300 (Standard Practices for Trees, Shrubs, and other Woody Plant Maintenance) with such pruning also being accomplished in a professional manner in accordance with pruning standards of the National Arborist Association or accepted local trade standards and practices.

b. Palm trees shall be pruned to a “Tropical Cut” or to a nine (9) o’clock and three (3) o’clock angle from the horizontal at the base of the palm’s bud or lowest fronds. Approximately seven (7) to ten (10) green fronds shall be left at the head of the palm tree after pruning. The pruning shall include removal of all palm nuts, brown or dead seed stalks and lower growth fronds.

c. Pruning work shall be done in a professional manner in accordance with acceptable trade standards and practices. Maintenance workers shall not climb upon palm trees with tree spikes to remove palm fronds. Rather, the pruning shall be accomplished by the use of a ladder, boom truck or lift crane equipment and all resultant debris from the pruning shall be removed and appropriately disposed. The site shall be left in a clean and neat manner.

d. When periodic heavy pruning work is being performed within roadway travel ways utilizing lift crane equipment or a boom truck, adjacent through traffic lanes or turn lanes to the work area shall be closed using appropriate traffic control devices and signage in accordance with current FDOT traffic control standards and specifications and specific directives of the City.

10. Fertilization: City requirements for fertilization of landscape plantings within public right-of-way and easements are set forth below.

a. Granular fertilization of shrubs and groundcovers shall be applied mechanically or by hand in a twelve (12) inch wide radius ring around the base of the plants. Granular fertilization of trees and palms shall be determined by the caliper (diameter) of the trunk and broadcast around the plant’s base from a distance of 12 inches to the drip line of the palm whenever possible. An 8 oz. cup volume approximately equals one (1) pound of fertilizer material. Subject to specific provisions for fertilization as contained hereinafter, trees and palms shall generally receive one (1) cup of fertilizer for each one (1) inch of caliper and shrubs and groundcovers shall receive one (1) cup per three (3) feet of height or spread or one-half (1/2) cup per eighteen inches (18”) of height or spread. All applied fertilizer shall be appropriately removed and properly disposed from the surfaces of all sidewalks, concrete curbing and asphalt pavements.

b. For turf areas and plant beds containing shrubs, groundcover plantings and trees, fertilizer (13-3-13) shall be applied shall be applied at a rate of ten (10) pounds per each one thousand (1,000) square foot area for all turf plant bed

surfaces. Four applications of (13-3-13) fertilizer should be applied yearly. The above notwithstanding, permittees shall maintain turf areas in accordance with the Florida Lawn Handbook (latest or most current edition) as published by the University of Florida - Institute of Food and Agricultural Science.

c. The following provisions for fertilization as recommended by the City of Marco Island is a copied document (Palm Nutrition Guide[1] by Timothy K. Broschat[2]) having copyright authority by the University of Florida, Institute of Food and Agricultural Sciences (UF/IFAS) for the people of the State of Florida. (Note: UF/IFAS retains all rights under all conventions, but permits free reproduction by all agents and offices of the Cooperative Extension Service and the people of the State of Florida. Permission is granted to others to use these materials in part or in full for educational purposes, provided that full credit is given to the UF/IFAS, citing the publication, its source, and date of publication).

i. Palms are among the most important ornamental plants in Florida landscapes and production nurseries. Palms suffer quickly and conspicuously from improper mineral nutrition, whether due to insufficient or incorrect fertilization. They also may exhibit certain nutritional disorders in unique ways compared to other ornamental plants. Some nutritional problems in palms are difficult to diagnose accurately because symptoms of several different mineral deficiencies may overlap. In this guide, nutritional disorders common on palms in the landscape, production field, and container nursery are discussed and illustrated. Fertilization recommendations for palms in these situations are also provided.

ii. Nutritional Disorders in the Landscape or Production Field –Nitrogen. Nitrogen deficiency is relatively uncommon in Florida landscape palms, compared to other elements such as K, Mg, and Mn. Symptoms of N deficiency include an overall light green color and decreased vigor of the palm (Plate 1). It is easily corrected by applying any N fertilizer to the soil. Leaf color quickly darkens in response to either soil or foliar fertilization.

Plate 1.

iii. Potassium deficiency is perhaps the most widespread and serious of all disorders in Florida palms. Symptoms occur first on oldest leaves and affect progressively newer leaves as the deficiency becomes

more severe. Symptoms vary among palm species, but typically begin as translucent yellow or orange spots on the leaflets (Plate 2). These may or may not be accompanied by necrotic pots. Leaflets will typically have areas of necrosis along their margins (Plate 3). As the symptoms progress, leaflets or entire leaves will become withered or frizzled in appearance (Plate 4). The midrib usually remains alive on K-deficient leaves, although it may be orange in color instead of green in some species. In date palms (Phoenix spp.), symptoms are slightly different in that older leaves show an orange-brown discoloration near the tip (Plate 5). It is also the leaflet tips, rather than the margins, that become necrotic as the deficiency progresses. The color of the chlorotic region in Phoenix leaves is a dull orange or even tan (Plate 5), in contrast to the bright yellow of Mg deficiency (Plate 6).

Plate 2.

Plate 3.

Plate 4.

Plate 5.

Plate 6.

Potassium is translocated from older to new leaves as required by the palm. In severe deficiencies, the canopy will be greatly reduced in size due to the removal of K from all leaves. Once all K has been removed from older leaves, the palm will go into a state of decline, with reduced trunk diameter (pencil-pointing), and the emergence of small, frizzled or chlorotic new leaves. Without prompt treatment, these palms will usually die. K deficiency affects all species of palms, but is most severe in royal, queen, coconut, areca, and spindle palms. Treatment requires broadcast soil applications of sulfur-coated potassium sulfate at rates of 3 to 8 lbs. per tree 4 times per year plus one-third as much controlled release magnesium fertilizer to prevent a K--Mg imbalance (and resulting Mg deficiency), from occurring. Symptomatic leaves on K-deficient palms will never recover and must be replaced by new, healthy leaves. In severely deficient palms, this means replacing the entire canopy, a process that may take 2 years or longer. Foliar sprays with K fertilizers are ineffective in correcting the problem since the amount of K supplied by a foliar spray is insignificant compared to the amount needed to correct the problem.

iv. Magnesium deficiency is also quite common in Florida palms, but especially in Phoenix canariensis. As with K deficiency, symptoms occur first on the oldest leaves and progress up through the canopy. Typical symptoms are a broad light yellow band along the margin of the older leaves with the center of the leaf remaining distinctly green (Plate 6). In severe cases, leaflet tips may become necrotic, but Mg

deficiency is rarely, if ever, fatal to palms. Magnesium deficiency is best treated preventatively since treatment of deficient palms takes considerable time. As with K deficiency, symptomatic leaves will never recover and must be replaced by new healthy leaves. On acid soils, dolomite and magnesium oxide are excellent slow release Mg sources, but on neutral to alkaline soils more soluble forms such as kieserite (a less soluble form of magnesium sulfate) or preferably, coated kieserite are required. They should be applied at rates of 2 to 4 lbs per tree 4 times per year plus coated potassium sulfate at the same rate to correct the problem and prevent a K--Mg imbalance from occurring.

v. Manganese deficiency or "frizzletop" is a common problem in palms growing in the alkaline soils that cover much of south Florida. Symptoms occur only on new leaves that emerge chlorotic, weak, reduced in size, and with extensive necrotic streaking in the leaves (Plate 7). As the deficiency progresses, succeeding leaves will emerge completely withered, frizzled, or scorched in appearance and greatly reduced in size (Plate 8 and Plate 9). Later, only necrotic petiole stubs will emerge and death of the bud quickly follows.

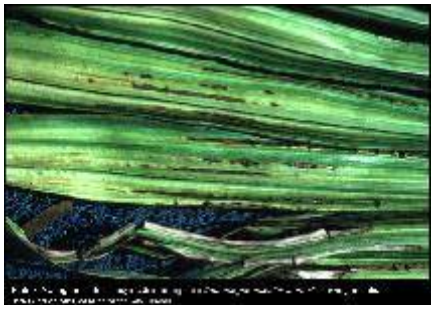

Plate 7.

Plate 8.

Plate 9.

vi. Manganese deficiency is primarily caused by the element's insolubility at high pHs. In palms such as coconut that are not normally affected by the problem, cold soil temperatures during the winter and spring months, reduce root activity and thus the uptake of micronutrients (especially Mn). Coconut palms severely deficient in Mn during the winter and spring will usually grow out of the problem without special treatment once soil temperatures warm up in late spring. Other palms such as queen, paurotis, and pygmy date palms, are highly susceptible to Mn deficiency and must be treated with soil or foliar applications of manganese sulfate or they will likely die.

vii. Iron deficiency is relatively uncommon in landscape palms and is not usually caused by a lack of Fe in the soil, or even by high soil pH, as in many other plants. Iron deficiency usually appears on palms growing in poorly aerated soils or those that have been planted too deeply. Waterlogged soils and deep planting effectively suffocate the roots and reduce their effectiveness in taking up nutrients such as Fe. Deficiency symptoms appear first on the new leaves and in most palms consist of uniformly chlorotic new leaves (Plate 10). As the deficiency progresses, new leaves will show extensive tip necrosis and reduced leaf size. Early symptoms in queen palms include pea-sized green spots on otherwise yellowish new leaves (Plate 11).

Plate 10.

Plate 11

Iron deficiency symptoms can sometimes be temporarily alleviated by regular foliar applications of iron sulfate, but long term correction will only occur when the poor soil aeration or improper planting depth that caused the deficiency, are corrected. Diagnosis of nutrient deficiencies by visual symptoms alone can be difficult, since some of the symptoms overlap considerably in some species. For instance, Mn and late-stage K deficiencies are easily confused on queen and royal palms and K and Mg deficiencies are very similar in pygmy date palms. Correct diagnosis can only be assured if leaf nutrient analysis is performed on symptomatic palms.

viii. Nutritional Disorders in Container Grown Palms: Palms growing in containers are susceptible to the same deficiencies that landscape palms experience, but the relative importance of the various deficiencies, as well as the causes, are different. Container media generally are more acid and have greater nutrient holding capacities than Florida native soils, therefore leaching and insolubility of nutrients are much less of a problem. In addition, container-grown palms are often fertilized with more complete slow release fertilizers or regular liquid fertilization that prevents most deficiencies from occurring.

In containers, N deficiency is the most common deficiency and is caused simply by insufficient N in the medium (Plate 1). It is typically the most limiting element in container production, whereas K, Mg, and Mn are much more limiting in landscape situations. Potassium deficiency can occur in containers if fertilizers having low K analysis are used, and Mg deficiency will occur if insufficient or low-grade dolomite is added to the medium. Amendment of container media with dolomite is absolutely essential unless other sources of Ca and Mg are used in the fertilization program.

Sulfur deficiency occasionally occurs in containers if sulfate fertilizers are not used. Symptoms are virtually identical to those of Fe deficiency and can only be correctly diagnosed by leaf nutrient analysis. Manganese deficiency is much less common in containers since the growing medium is usually acid and Mn is much more soluble at lower pHs.

Iron deficiency is quite common in container-grown palms (Plate 10). Containers generally provide poor soil aeration at the bottom of the pot where palm roots typically are concentrated and Fe deficiency is usually the result. Planting palms more deeply than they were originally growing, will have the same effect and is a major cause of chronic Fe deficiency in container-grown palms. Although foliar sprays with iron sulfate may temporarily correct the problem, permanent correction can only be achieved by replanting the palms at the correct depth and in new, well-drained media. For this reason, it is important to use a container medium that will not quickly break down, resulting in finer particles and reduced aeration. Our studies have shown that dibbling of slow release fertilizers (as opposed to surface application) prevents the rapid breakdown of container media and greatly reduces nutritional problems associated with poor soil aeration.

Other essential elements such as P, Ca, Cu, Zn, B, and Cl, are occasionally found to be deficient if one of these elements is omitted from the fertilizer program, but such deficiencies are generally quite rare in container production or in landscapes.

ix. Palm Fertilization Programs - Field Nurseries: Little or no research exists on fertilization rates for field-grown palms and rates will vary with the soil type and size of the palms. In general, granular fertilizers should be applied to the soil at a rate of 1.5 lbs. /100 sq. ft. of canopy area 4 times per year or 1 lb. /100 sq. ft. 6 times per year. Rates or frequency of application can be reduced in low rainfall areas or on soils that have a moderately high cation exchange capacity. Fertilizers should be uniformly broadcast under the canopy of the palm rather than concentrating it in bands where some roots may be injured and others are never in contact with any fertilizer.

Fertility varies greatly among soil types in south Florida, but certain nutrient elements are consistently lacking in all soil types and must be applied through fertilization. These are nitrogen (N), potassium (K), magnesium (Mg), and manganese (Mn). A good balanced fertilizer for south Florida should provide N, P, K, and Mg in a 2:1:3:1 ratio and contain sulfur (S), about 1 to 2% Fe and Mn, and trace amounts of zinc (Zn), copper (Cu) and boron (B). It is very important that the N, K, and Mg be present in controlled release forms such as resin- or sulfur-coated products. If water-soluble N, K, and Mg sources must be used, but they should be applied more frequently (at least monthly) and at lower rates (3/4 lb. /100 sq. ft.) to compensate for the rapid leaching of these elements through the soil.

Foliar fertilization is a common practice in palm production. It is a rather inefficient method for providing macronutrient elements such as N, K, and Mg, but is very useful for supplying micronutrients such as Mn and Fe to the plants when soil conditions prevent adequate uptake of these elements by the roots. Foliar fertilization is best used as a supplement for a normal soil fertilization program, particularly for micronutrients.

Liquid fertilization programs are not the most efficient delivery system for field nurseries, especially when overhead irrigation is used. The soluble nature of liquid fertilizer results in leaching or runoff of a great deal of the nutrients before uptake by the roots. To compensate, the grower often increases either rates or frequency of application, which results in waste and the potential for ground or surface water contamination. If drip irrigation is used in the field, injection of liquid fertilizer through the system may be cost-effective, and the problems inherent in overhead delivery may be minimized. A constant fertilization program delivering approximately 150 ppm of both N and K (and 1/3 as much Mg), will probably be adequate. It is a good idea to have your soil and irrigation water tested before formulating the nutrient analysis of your solution fertilizer.

For containerized palms, a fertilizer having a N-P 2 O 5 -K 2 O ratio of 3-1-2 is recommended. An 18-6-12 or similar slow release fertilizer can be incorporated into the container medium at planting time according to the manufacturer's recommended rate. As discussed previously, dibbling of slow release fertilizers (as opposed to surface application) is recommended over surface application and even incorporation. The extra labor costs will be offset by the added longevity of the container soil, reduced weed growth, and consequently, better growth of the crop. One and a half to 3 pounds of a micronutrient amendment (rate depends on product), should also be incorporated into a cubic yard of planting medium. Approximately 8 to 12 lbs of dolomite per cubic yard incorporated into the mix will increase the pH of most media to 6-6.5

and provide calcium and magnesium for the duration of the crop. If constant liquid fertilization programs will be used instead, approximately 150 ppm of both N and K will probably be adequate. When soil temperatures drop below 65°F fertilization rates should be reduced. A monthly foliar fertilization with a soluble micronutrient spray is favored by a number of growers. Many palm species respond favorably to such a program.

Fertilization of palms in the landscape does not differ appreciably from recommendations for palm field nurseries. Slow release palm special fertilizers like those described in the field nursery section should be applied uniformly to the entire ornamental planting area (or at least the entire palm canopy area) at a rate of 1.5 lbs. /100 sq. ft. 4 time per year or 1 lb. /100 sq. ft. 6 times per year. Since roots of ornamental groundcovers, shrubs, or broadleaf trees are often intermingled with those of palms in the landscape and share the same soil conditions, these other ornamental plants will also benefit from this fertilization method.

Most landscapes tend to be a mosaic of turf and ornamental plants. Although the line of demarcation between turf and ornamental plantings may appear to be distinct above ground, the root systems of palms, broadleaf trees, and shrubs usually extend well into the turf area and share the soil with turf roots. Turf fertilizers typically are high in N relative to K and tend to have controlled release N, but water soluble K and often no Mg or micronutrients. When these products are used on turf near palms, they often result in K deficiency being induced on palms growing nearby due to their high N to K ratio. Even if these turf fertilizers have a reasonable N to K ratio in their analysis, the controlled release N, but soluble K can result in a severe N to K imbalance over time due to differential leaching of the K. Therefore, it is recommended that turfgrass growing within 30 ft of any palm or broadleaf tree or 10 ft of any shrub be fertilized only with the "palm special" landscape fertilizers discussed in the field nursery section above.

Footnotes

1. This document is SS-ORH-02, a series of the Environmental Horticulture Department, Florida Cooperative Extension Service, Institute of Food and Agricultural Sciences, University of Florida. Publication date: July 1992. Revised: July 2000. Please visit the EDIS Web site at http://edis.ifas.ufl.edu.
2. Timothy K. Broschat, Professor; Ft. Lauderdale-REC, Ft. Lauderdale, FL, Cooperative Extension Service, Institute of Food and Agricultural Sciences, University of Florida, Gainesville, 32611.

The Institute of Food and Agricultural Sciences (IFAS) is an Equal Employment Opportunity - Affirmative Action Employer authorized to provide research, educational information and other services only to individuals and institutions that function without regard to race, creed, color, religion, age, disability, sex, sexual orientation, marital status, national origin, political opinions or affiliations. For information on obtaining other extension publications, contact your county Cooperative Extension Service office. Florida Cooperative Extension Service / Institute of Food and Agricultural Sciences /University of Florida / Larry R., Interim Dean.

Copyright Information

This document is copyrighted by the University of Florida, Institute of Food and Agricultural Sciences (UF/IFAS) for the people of the State of Florida. UF/IFAS retains all rights under all conventions, but permits free reproduction by all agents and offices of the Cooperative Extension Service and the people of the State of Florida. Permission is granted to others to use these materials in part or in full for educational purposes, provided that full credit is given to the UF/IFAS, citing the publication, its source, and date of publication.

11. Mulching: Organic mulch areas with no mulch or new planting areas shall have mulch placed to provide for a maximum of two (2) to three (3) inches of a non-compacted or unsettled depth measured from the existing soil grade. The area to receive the mulch shall be raked level to establish the proper finished grade and all weeds shall be removed prior to the placement of the mulch. Replenish mulch areas on an as-needed frequency to maintain an aesthetically pleasing appearance.

12. Lane Closures: Lane closures for median maintenance shall be limited. No lane closures shall occur until all required traffic control devices such as lane closed signs; advance-warning signs, arrow boards, traffic cones and other measures have been installed under the direction and approval of the City.

13. Irrigation Systems: Irrigation systems within public right-of-way shall be checked and repaired as necessary. Each zone shall be manually turned on at the valve periodically and a thorough inspection conducted to ensure proper operations of the system. Existing quick coupling valves shall be inspected and operated frequently to ensure proper functionality. Maintenance responsibilities by permittees will include cleaning and adjustment of heads, nozzles, installation or replacement of risers, repair of minor PVC pipeline breaks, repair of other subsurface piping or restricted sprinkler lines, replacement of damaged valve boxes/lids and proper adjustment of controller and rain shut off switches for optimum settings and operations. Where required, permittees shall maintain on site reclaimed water irrigation signage.

a. Subsurface Irrigation Systems: No excavation or mechanical metal edging around plant beds shall be done within public right-of-way. Mechanical metal blade edging is permitted along the back of curbing.

Weekly Service Requirements:

A visual inspection of the subsurface irrigation systems shall be performed weekly to determine if the systems are functioning normally and if pipe leaks, piping damage and flooded areas exist. Permittees shall undertake necessary repairs promptly. Inspections shall also include review and re-setting of irrigation controllers and in-ground moisture sensor adjustments or adjustments to other rain sensing devices as needed.

<u>System Computer/ Controller:</u>

i. Operate, adjust and set controller to provide proper operation of the systems.

ii. Diagnose and repair electrical and mechanical malfunctions.

iii. Monitor and adjust system zone moisture levels based upon moisture sensor readings.

iv. Operate controller on automatic, manual and single trip operation.

v. Monitor controller standby battery backup and replace as required.

vi. Inspect automatic control assemblies and quick coupling valves.

vii. Review control valve assembly and by-pass system for proper settings.

viii. Open zone control valve assemblies and quick coupling valve boxes to review valves for leaks, proper pressure gauge operation, and proper settings and to ensure the appurtenances are not clogged with debris or mulch.

Pump Sites:

ix. Inspect pumps for proper operations.

x. Permittees shall also monitor proper operations of well water flows and readings in accordance with City codes.

xi. Review system water source connections to include water meters, backflow preventers, gate valve points of connection and main lines for proper operation.

Monthly Service Requirements:

Automatic Control Valve Assembly

xii. Manually operate valves, and clean valve assembly filters.

Backflow Assembly

xiii. Review assembly for proper operation and clean filter as needed.

Quick Coupling Valves

xiv. Review boxes and operate valve.

Pump Sites

xv. On an as-needed frequency troubleshoot each pump station, checking amperage draw and document the results for future reference.

xvi. Manually run the system to check for proper coverage and to ensue that no sprinkler head and nozzle are spraying onto the roadway. Clean and adjust sprinkler heads, nozzles, and irrigation shields to ensure proper coverage.

xvii. Permittees shall check all zone wiring and solenoid conditions with an OHM meter and document the results for future reference.

xviii. Permittees shall clean the strainers filters and inspect them for wear at the pump station.

xix. Manually run the system with open flush caps and review sprinkler head indicators located at the end of zones.

xx. Review pressure gauge readings at control valve assemblies for each zone, as well as gauges located at the end of zones where present to determine the system and porous piping is functioning properly.

xxi. Check, analyze and adjust flow control devices as required.

Quarterly Service Requirements:

xxii. Review all subsurface system piping, valve assemblies, wiring, moisture sensors and controllers for overall operation and provide adjustments as required to assure proper operation and irrigation application.

b. Conventional Pop-up Irrigation Systems:

Weekly Service Requirements:

i. Each median zone shall be manually turned on at the valve to ascertain proper operation of the system.

ii. Repair system for any blown-off heads, broken lines or leaks around heads or valves.

iii. Check the controller and rain sensing devices for proper operation and settings.

iv. Permittees shall further adjust all sprinkler heads to ensure that all landscaped areas receive one hundred percent (100%) irrigation coverage.

v. Within all work areas the Developer shall review the plant material and turf for dry conditions and if found correct the problem.

Monthly Service Requirements:

vi. Each median zone shall be manually turned on at the valve to ascertain proper operation of the system.

vii. Manually run the system, clean and adjust sprinkle heads/nozzles and concrete donuts as necessary to ensure proper coverage and that are no sprinkler heads/nozzles spraying directly onto the roadway.

viii. Each median and side right-of-way zone shall be manually turned on at the valve to ascertain proper operation of the system.

ix. Repair system for any blown-off head, broken lines or leaks around heads or valves.

x. Check the controllers and rain sensors for proper operation and settings.

xi. Permittees shall further adjust all sprinkler heads to ensure that all landscaped areas receive one hundred percent (100%) irrigation coverage.

xii. Within all work areas permittees shall review the plant material and turf for dry conditions and if found correct the problem.

c. General Service Requirements for Irrigation Systems:

i. Should South Florida Water Management District (SFWMD), the City of Marco Island or other governing agency establish water restrictions the irrigation systems shall be inspected and all other controllers set to the mandated hours of operation.

ii. Replace defective heads or nozzles, install or replace defective risers and repair minor breaks or restricted sprinkler lines.

iii. Replace damaged valve boxes/lids.

iv. Inspect, clean, and replace, if necessary, screen/filters within the sprinkler heads.

v. Keep all grass and mulch out of all valve boxes. All valve boxes in sod areas are to be kept at sod level. All valve boxes in plant beds are to be kept two inches (2”) above finished mulch.

vi. One hundred percent (100%) irrigation coverage shall be maintained within all irrigated landscaped areas.

vii. Notification to the City’s representative is required when acts of vandalism or accidents have occurred to the irrigation system. Photos shall be taken and provided to the City’s representative.

d. Miscellaneous Irrigation Maintenance Responsibilities:

i. Should the temperature be forecast to be below thirty-four (34) degrees, permittees shall be responsible for turning the irrigation system off in order to protect plants from possible freeze damage.

ii. It shall be responsibility of permittees to notify the City’s representative of any irrigation problems or additional irrigation maintenance needs that may be the responsibility of the City.

iii. Irrigation service personnel by permittees shall trouble shoot time clocks, i.e. power-in 110 volt and 24-volt fuses, 24 volts output when necessary.

iv. Irrigation services personnel by permittees shall also trouble shoot any pump start relay, main fuses and capacitors when necessary.

14. Brick Pavers: All median brick paving and other paver brick areas such as driveways and pedestrian crossings shall be appropriately maintained to ensure that brick surfaces are safe for pedestrian use and reasonably free of markings, breakages, gum, debris and excessive dirt deposits. Upon finding damaged areas, permittees shall clean-up debris if present and flag-off the areas with protective barriers or high visibility hazard tape for follow up repairs. Damaged areas shall be repaired promptly.

15. Pest Control: Trees, palms, shrubs, groundcovers and sod shall be closely monitored for pests and diseases and must be treated appropriately by a licensed Pest Control Operator approved by the City.

APPENDIX B

CITY OF MARCO ISLAND
PUBLIC WORKS DEPARTMENT

TRAFFIC IMPACT STUDY REQUIREMENTS

1. Responsibilities for Traffic Impact Studies

   a. A traffic impact study (TIS) shall be required at the determination of the City Marco Island Public Works Department in order to adequately assess traffic impacts of a land development proposal on the existing or planned street system within or adjacent to the City limits.

      The primary responsibility for assessing traffic impacts associated with a proposed development will rest with the land developer/permittee with the City Public Works Department serving in a review and decision making role in the interest of public heath, safety and welfare. Each TIS report shall be prepared and certified by a qualified licensed professional engineer.

   b. Unless waived by the City a written TIS shall be prepared and submitted as part of a land development proposal if any of the following three warranting conditions are met:

      i. When trip generation during the peak season peak hour is expected to exceed 100 vehicles as determined by the City; or

      ii. With a project site area of one (1) acre or greater; or

      iii. With a land development site adjacent to a roadway with an existing level of service of D, E or F.

   c. Traffic analyses and studies shall be submitted by a permittee and reviewed by the City under the classification of a minor TIS or major TIS as follows:

      i. A minor TIS applies to a project site with a total area less than ten (10) acres. Other than for the project site itself, a minor TIS does not include the requirement of conducting an analysis of future traffic projections based on build-out of land use within the study area nor does it include a twenty (20) year traffic projection within the study area.

      ii. A major TIS applies to a project site with a total area of ten (10) acres or greater. A major TIS includes the requirement to conduct an analysis of future traffic projections based on build-out of land use

within the study area or a twenty (20) year traffic projection for the project site whichever time horizon is the greater year.

d. The preparation of a TIS will be the responsibility and duty of the land developer/permittee or authorized agent. The TIS must be signed and sealed by a Florida licensed professional engineer having sufficient qualifying experience in transportation engineering or traffic engineering. Upon submission of a draft TIS the City's Public Works Department will perform a review of the study data sources, methodology, findings and conclusions. City review comments will then be provided in a written form. The developer and its authorized agent (i.e., record engineer) will then have an opportunity to amend the draft TIS and incorporate revisions stipulated by the City prior to submitting a final signed and sealed TIS report. The City must approve each required TIS report and recommended or stipulated transportation improvements prior to issuance of a right-of-way construction permit.

e. City personnel in the Public Works Department will endeavor to review each preliminary edition or first draft TIS submittal within ten (10) business days after the date of receipt. If subsequent reviews or revisions are required to the preliminary or first draft TIS, City personnel will endeavor to process each additional review within five to ten (5-10) business days of the date of receipt by the Public Works Department. If a project site is located adjacent to or in the vicinity of the City limits, greater TIS review and processing time periods may become necessary to adequately assess and discuss traffic impacts of a land development proposal with officials of Collier County government or the State of Florida Department of Transportation.

f. The permit applicant will be notified at a land development pre-application meeting if a TIS will be required by the City, provided that sufficiently complete information is available for the City to evaluate and determine whether the trip generation criterion or other warranting conditions have been met pursuant to sub article 1. b. above. If sufficient traffic data and related transportation information is not available at the development pre-application meeting and the permit applicant's project site appears to involve an intense or high-density land use the applicant will be informed that preparation and submittal of a TIS is required.

g. Developer representatives or traffic engineering consultants, as authorized agents for a permittee, are also encouraged to discuss land development proposals with personnel of the City's Public Works Department prior to a land development pre-application meeting and prior to commencing with TIS efforts. Minimum TIS topics for discussion prior to or during pre-application meetings will typically include trip generation, directional distribution of traffic, trip assignment, boundary and description of the TIS study area, intersections requiring capacity analysis, access conditions and impacts and for a major TIS discussions would include methodology for projecting build-out traffic volume in the study area or the twenty (20) year traffic projection.

These early planning interactions are expected to establish effective

cooperation and communication between the City and the permittee or the permittee's authorized agents in forecasting future traffic volumes and characteristics that realistically define traffic movements associated with the proposed land development. Specific requirements by the City will vary depending on the project site location and traffic conditions.

2. Traffic Impact Study Format And Content

   a. In order to provide for technical consistency and to facilitate uniform City reviews of TIS submittals, developer record engineers or transportation consultants shall comply with and utilize the ~~a~~ report format as outlined hereinafter.

   b. Introduction: The introductory or executive summary portion of the TIS report must contain the following information:

      i. Project Site and Study Area Boundaries: A brief description of the size of the land parcel representing the project site and its location within the City's jurisdiction and Collier County's jurisdiction if applicable shall be included in this section. In addition, the roadways that afford access to the site which are included in the study area must be identified and described.

         The boundary and geographical limits of the study area should be based on traffic engineering judgment and a measurable understanding of existing traffic conditions surrounding the site. However, for each project site the City, permittee and permittee's authorized agents should mutually agree upon the adopted study area boundary. A final definition and description of the TIS study area will usually result from initial discussions with City personnel during or prior to the pre-application meeting. A vicinity map that depicts the land development project site and the TIS study area boundaries in relation to the surrounding transportation system shall be included as part of the introductory part of the report.

         A recommended approach for determining a traffic impact study area radii is described in a reference special report entitled "What Is The Radius for A Traffic Impact Study?" as adopted by the Florida Section of the Institute of Transportation Engineers at the May 3, 1990 Urban Traffic Engineering Council meeting. The special report is attached as part of this Appendix B.

      ii. Existing and Proposed Project Site Uses: The existing and proposed land uses of the project site must be identified in terms of the various zoning categories of the City.

      iii. Existing and Proposed Uses in Vicinity of Project Site: For a major TIS, a narrative with accompanying maps describing existing land

uses in the study area as well as current zoning and development types must be included. All vacant land within the study area and its assumed future land uses must be identified. This latter requirement is especially important where large tracts of undeveloped land are in the vicinity of the project site and within the prescribed study area.

iv. Existing and Proposed Roadways and Intersections: Within the study area, the permit applicant must describe and provide traffic volumes for all existing roadways and intersections including geometrics, traffic signal controls and transportation improvements contemplated by government agencies or other parties. This information shall include a description of all proposed transportation improvements, the planned scope of work, implementation schedule and the responsible agency and funding source(s). A map must be provided showing the location of all planned new transportation Facilities and improvements to existing transportation Facilities.

c. Trip Generation and Design Hour Volumes: A summary table listing each type of City land use (including the Institute of Transportation Engineers' land use code), the land parcel sizes involved, the trip generation rates used, and the resultant total trips generated must be provided. Trip generation must be calculated under the existing and proposed zoning based on the latest data contained in the Institute of Transportation Engineers' (ITE) Trip Generation Manual. In the event that data is not available for the proposed land use, the City must approve estimated rates prior to acceptance of the TIS.

d. Trip Distribution: The estimated percentile distribution of trips from the proposed land development to destinations must be clearly stated in the report using the North, South, East and West compass points. Market studies and information concerning origin of trip attractions to the proposed development may be used to support these assumptions when available. A map showing the percentage of project site traffic to be loaded on each street must be provided as part of the TIS graphics material.

e. Trip Assignment: The direction of approach of project site-generated traffic via the study area's street system will need to be presented. The technical steps for the analysis, basic procedures and assumptions used in developing the TIS must be clearly stated and accepted by the City. The assumed trip distribution and assignment must represent the most logically traveled routes for drivers accessing the proposed land development. These routes can be determined by observation of travel patterns to existing land uses in the study area.

f. Existing and Projected Traffic Volumes: Graphics must be provided which show the following traffic impacts for private access points, intersections and streets as specified by the Public Works Department during the pre-study stage or at the time of the pre-application meeting.

i. Project site traffic consisting of both average daily traffic and ingress/egress turning movements for AM and PM peak hour volumes generated in the non-peak season is required.

ii. Total traffic including project site generated traffic for average daily traffic and peak hour ingress/egress turning movement volumes generated in the peak season is required. These volumes must include through and turning movement volumes for existing traffic under a minor TIS, and for a major TIS a separate set of traffic forecast volumes and data that also include build-out conditions in the study area or twenty (20) year traffic projections (whichever is specified by the City) will be part of the TIS report.

iii. Other pertinent data supporting or clarifying the peak season peak hour volumes, which may be critical to sufficiently forecasting project site traffic and traffic growth on the street system in the study area, shall be included in the graphics and narrative(s).

iv. Actual counts of existing through traffic and turning movement volumes for the entire street system in the study area taken at the time the TIS is being prepared is required, and such traffic counts shall include average daily traffic and peak hour volumes generated in the peak season. Traffic counts taken substantially in advance of the TIS report may be considered as outdated data shall be subject to rejection by the City.

v. Forecast traffic for the street system in the study area shall be based on traffic from the proposed land development and counts of existing traffic (i.e. for average daily traffic and peak hour volumes generated in the peak season). The component of existing traffic that is attributable to existing land uses must be identified in the increase in total traffic generated from the proposed land uses.

vi. For a major TIS, projected total traffic for the street system in the study area shall be included and will be based on forecast traffic from the proposed land development, counts of existing traffic and forecast volumes and data for build-out conditions in the study area or twenty (20) year traffic projections (whichever is specified by the City) for average daily traffic and peak hour volumes generated in the peak season.

vii. All raw traffic count data and worksheets for calculations and analyses shall be provided in the appendices of the report. Computer modeling techniques and associated printouts may be used and included as part of the report.

viii. For a major TIS the City will provide available volume projections for background traffic growth, or alternatively a method for determining these volumes will be recommended by the City.

g. Level of Service:

i. Except where the City's Comprehensive Plan has a less restrictive level of service standard (e.g. D or E for various County or State roads), a level of service of C will be the engineering design objective for all vehicular movements for project site and non-site traffic within the City including existing traffic volumes and forecast traffic at build-out of the study area.

ii. For a major TIS, the design year shall be approximately twenty (20) years following completion of construction and will include volumes generated by build-out of the study area or a twenty (20) year projection in background traffic (whichever is specified by the City).

h. Capacity Analysis:

i. If directed by the Public Works Department during pre-study activities, at the pre-application stage or subsequent to submittal of a permit application, the permittee shall conduct a capacity analysis for all public street intersections within the study area to be impacted by the proposed land development and also for all private property access points along streets adjacent to or in the vicinity of the proposed development within the limits of the adopted study area.

As a minimum requirement, an intersection capacity analysis will be required for all intersections where the level of service for any movement of an intersection is C, D, E or F for a major TIS and when the sum of peak hour critical volumes is expected to exceed 1200 vehicles per hour. The peak season peak hour period shall be analyzed. For a major TIS, roadway capacity calculations shall also include an analysis for twenty (20) year projections or study area build-out conditions.

ii. The intersection capacity analysis calculations shall be based on the following: For short-term impacts (five years or less) an operational (traffic engineering) analysis will be performed in accord with techniques contained in the current edition Highway Capacity Manual. For long-range impacts (more than five years), planning level analysis techniques contained in the current edition Highway Capacity Manual may be appropriate as determined by the Public Works Department.

iii. All capacity analysis work sheets and accompanying attachments shall be included in the appendices of the TIS report.

I. Traffic Signals:

i. The need for new traffic signals will be based on warrants contained in the Manual on Uniform Traffic Control Devices. In determining the location of a proposed new traffic signal installation, traffic progression is of paramount importance and must be addressed in the TIS report.

ii. In general, a spacing of one-half mile for all signalized intersections should be maintained. This spacing is usually necessary to effectively achieve a desired speed, capacity, and optimum signal progression. Pedestrian movements must be considered in the evaluation and adequate pedestrian clearance shall be provided in the signal cycle split assumptions.

iii. To provide flexibility for existing conditions and ensure optimum two-way signal progression, a traffic engineering analysis must be performed to properly locate all proposed access points that may require signalization. The section of roadway to be analyzed for signal progression will be determined by the City and will include all existing and possible future signalized intersections.

iv. The progression pattern calculations must use a signal cycle consistent with current signal timing policies of the City. A desirable bandwidth of fifty (50) percent of the signal cycle must be used where existing conditions allow.

Where intersections do not have existing traffic signals but are expected to warrant future signal installations, a typical cycle split allocation of sixty (60) percent for the mainline and forty (40) percent for the cross street should be assumed. Cycle split assumptions must relate to volume assumptions in the capacity analysis of individual intersections, and when computerized progression analysis techniques are used, they must be of the type that utilizes turning movement volume data and pedestrian clearance times in the development of time/space diagrams.

The actual green time allocated to the cross street will be of a magnitude no less than the time which is required for a pedestrian to clear the main street using guidelines established by the Manual on Uniform Traffic Control Devices and standards by the Florida Department of Transportation (District One). Those intersections that would reduce the optimum bandwidth if a traffic signal were installed may be required by the City to remain un-signalized with turning movements limited by access design or median islands.

J. Conclusions

i. This chapter of the TIS report must be a clear and concise description of the study findings. It is anticipated that this conclusion chapter will serve as an executive summary.

K. Recommendations

i. In the event that the traffic analysis indicates unsatisfactory levels of service on study area roadways, a description of recommended transportation improvements to remedy deficiencies must be included in the TIS report.
These recommendations or proposals would include transportation improvement projects identified by the City, Collier County or the State Transportation Department for which funds have been appropriated and obligated. The assumptions regarding all future roadways and lane requirements in an analysis will require approval from the City.

ii. Proposed Recommended Improvements: This section of the TIS report must describe the location, scope and extent of proposed improvements to assure sufficient roadway capacity. A sketch of each improvement should be provided depicting the roadway length, type of typical section and other pertinent geometric features of the proposed improvements.

iii. Capacity Analysis at Critical Points: Another iteration of the capacity analysis must be performed and described to demonstrate the anticipated level of service(s) benefits to be gained because of implementing the recommended improvements. This level of service must be C or better except where the City's Comprehensive Plan has less restrictive level of service standards.

iv. Traffic Volume Proportions: For a major TIS, percentile volume assignments based on the traffic impact analysis may be required by the City to determine the proportion of traffic using various public improvements (both existing and proposed) by multiple land developments with the study area.

3. Typical Traffic Impact Study Report

a. Contents Outline

b. Introduction

i. Site and Study Area Boundaries (provide map).

ii. Existing and Proposed Site Uses (provide map).
iii. Existing and Proposed Uses in Vicinity of Site (major TIS, provide map).

iv. Existing and Proposed Roadways and Intersections (provide map).

c. Trip Generation and Design Hour Volumes (provide table).

d. Trip Distribution (provide figure).

e. Trip Assignment (provide figure).

f. Existing and Projected Traffic for Average Daily and Peak Hour Volumes Generated in the Peak Season (provide figure for each item).

i. Site traffic (including turning movements).

ii. Total traffic including site-generated traffic and for a major TIS projected traffic.

iii. Any other peak season peak hour necessary for complete analysis.

iv. Actual counts of existing traffic for street system in study area.

v. Projected traffic for the street system in study area from the proposed development.

vi. For a major TIS projected total existing traffic for street system in study area, plus new site traffic and projected traffic from build-out of study area land use.

vii. Raw traffic count data and analysis worksheets and computer modeling printouts.

viii. Volume projections provided by City for a major TIS.

g. Level of Service Analysis (provide figures in report and provide analysis sheets in Appendices).

h. Capacity Analysis (provide worksheets).

i. Traffic Signals (provide analysis sheets in Appendices).

j. Conclusions.

k. Recommendations.

i. Proposed Recommended Improvements (provide sketches of improvements).

ii. Capacity Analysis at Critical Points (provide Analysis Sheets in Appendices).

iii. Traffic volume proportions (for a major TIS only).

Footnotes:

1. A minor TIS includes a site with a total area less than ten (10) acres. A major TIS includes a site with a total area ten (10) acres or greater.

2. Information required on figures may be combined provided that the information is clearly legible.

3. Computations are to be prepared so that from them, a complete review and analysis can be made without research of any outside research of any outside data.

APPENDIX C

LISTING OF TYPICAL DESIGN STANDARDS

1. State of Florida Accessibility Code.

2. City policies, standards and specifications such as the City of Marco Island Utilities/Engineering Manual of Standards and Specifications for water, sewer and reclaimed water mains.

3. State of Florida Department of Transportation (FDOT) Design Standards for Design, Construction, Maintenance and Utility Operations on the State Highway System.

4. FDOT Manual on Uniform Minimum Standards for Design, Construction and Maintenance for Streets and Highways.

5. FDOT Standard Specifications for Road and Bridge Construction.

6. Operating and maintenance policies and standards established by the City's Public Works Director.

7. Operating standards or procedural processes established by resolution by the City of Marco Island City Council.

8. Applicable City of Marco Island subdivision regulations.

9. City of Marco Island Comprehensive Plan.

10. Rules and regulations by the South Florida Water Management District, the Florida Department of Environmental Protection and related state and federal agencies.

11. Policy and Guidelines for Vehicular Connections to Roads on the State Highway System with design modifications as may be shown on drawings included as part of this Handbook.

12. Manual on Uniform Traffic Control Devices (MUTCD) latest edition, published by the U.S. Department of Transportation.

13. FDOT Utility Accommodation Manual.

14. Other pertinent technical literature or documents representing professional standards of practice in various design disciplines.

15. State of Florida Fire Code and City of Marco Island adopted amendments.