ARTICLE I. - IN GENERAL

Sec. 30-1. - Title and citation.

This chapter shall be known as the "City of Marco Island Land Development Code" and may be cited and referred to herein as the "code" or "LDC." Citation to provisions contained in this code shall be referenced as "Sec. _____/_____/_____, LDC."

(Ord. No. 02-04, § 1, 1-7-2002)

Sec. 30-2. - Purpose and intent.

It is the purpose of the city council to establish the standards, regulations and procedures for review and approval of all proposed development of property within the city, and to provide a development review process that will be comprehensive, consistent, and efficient in the implementation of the goals, objectives, and policies of the city comprehensive plan.

In order to foster and preserve public health, safety, and welfare, and to aid in the harmonious, orderly, and progressive development of the city, it is the intent of Ordinance No. 02-04 that the development process in the city be efficient, effective, and equitable, in terms of consistency with established regulations and procedures, respect for the rights of property owners, and consideration of the interests of the citizens of the city.

The city council deems it to be in the best public interest for all property and development to be conceived, designed, built, and used in accordance with good planning and design practices and the minimum standards set forth in this code.

(Ord. No. 02-04, § 2, 1-7-2002)

Sec. 30-3. - Applicability.

The provisions of this code shall apply to all land, property and development within the corporate limits of the city. No development shall be undertaken without prior authorization pursuant to this code. Specifically, no building, structure, land or water shall hereafter be developed, or occupied, and no building, structure, or part thereof shall be erected, reconstructed, moved, located, or structurally altered except in conformity with the regulations set forth herein and for the zoning district in which it is located.

(1) Relationship to comprehensive plan. The adoption of this article is consistent with, compatible with and furthers the goals, policies, objectives, land uses, and densities or intensities contained and required in the city comprehensive plan, and it implements and directly advances the goals, policies and objectives of the such comprehensive plan. The city council hereby declares and affirmatively states that in the event that any land development regulation, this code, or any provision hereof or amendment hereto is not consistent with the adopted comprehensive plan, as amended, the provisions of the comprehensive plan, as amended, shall govern any action taken with regard to an application for a development order or other activity. Furthermore, any land development regulation, this code, or any provision hereof or amendment hereto shall be interpreted, construed and implemented in such a manner which will make it most consistent with the city comprehensive plan, as amended.

(2) Exceptions.

a. Previously issued building permits. The provisions of this article and any amendments hereto shall not affect the validity of any lawfully issued and effective building permit issued prior to the effective date of the ordinance from which this article is derived if:

1. The development activity authorized by the permit has commenced prior to the effective date of this code or any amendment hereto, or will commence after the effective date of the ordinance from which this article is derived but prior to the permit's expiration or termination; and

2. The development activity continues without interruption in good faith until development is complete. If the building permit expires, any further development shall be in conformance with the requirements of this article or any amendment hereto.

b. Time limits on previously approved development orders. Any time limits on any development order approved prior to the adoption of this article shall continue to run and shall not be enlarged, expanded or stayed by the adoption of this article. Furthermore, any time limits required under this article for any types of development orders which are more restrictive or shorter that the time limits remaining on previously approved development orders shall apply retroactively to all such previously approved development orders. However, the application of such more restrictive time limits under this article to previously approved development orders shall commence to run on the effective date of this code.

(Ord. No. 02-04, § 3, 1-7-2002)

Sec. 30-4. - Interpretations.

(a) Authority. The community development director shall have the authority to make all interpretations of the text of this code, the boundaries of zoning districts on the official zoning atlas, and to make all interpretations of the text of the comprehensive plan and the boundaries of land use districts on the future land use map.

The chief building official shall have the authority to make all interpretations of the text of this code on matters related to the building code, building permit requirements, building construction administrative code or building permits.

In cases where interpretations of both the chief building official and community development director are requested jointly, any conflict shall be resolved by the community development director.

(b) Initiation. An interpretation may be requested by any affected person, resident, developer, land owner, government agency or department, or any person having a contractual interest in land in the city.

(c) Procedures.

(1) Submission of request for interpretation. Before an interpretation shall be provided, a written request shall be submitted to the community development director, or chief building official, whichever is applicable, in a form established by him. A fee for the request and processing of the request shall be established at a rate set by the city council from time to time and shall be charged to and paid by the applicant.

(2) Determination of completeness. After a request for interpretation has been received, the community development director or the chief building official whichever is applicable, shall determine whether the request is complete. If the community development director or chief building official, whichever is applicable, determines that the request is not complete, he shall serve a written notice on the applicant specifying the deficiencies. The community development director or chief building official, whichever is applicable, shall take no further action on the request for interpretation until the deficiencies are remedied.

(3) Notification of affected property owner. Where a site specific interpretation has been requested by a party other than the affected property owner, the city shall notify the property owner that an interpretation has been requested concerning their property.

(d) Rendering of interpretation. After the request for interpretation has been determined complete, the community development director or chief building official, shall review and evaluate the request in light of the comprehensive plan, the future land use map, the code and/or the official zoning atlas, and building code related matters, whichever is applicable, and render an interpretation. The community development director and the chief building official may consult with the city attorney and other city departments before rendering an interpretation. Prior to the release to the applicant of any interpretation, such proposed interpretation shall be reviewed by the city attorney for legal form and sufficiency. Interpretations made pursuant to this section shall be rendered within 45 days of issuance of a determination of completeness.

(e) Form. The interpretation shall be in writing and shall be sent to the applicant by certified mail return receipt requested.

(f) Official record. The community development director shall maintain an official record of all interpretations rendered by either the community development director or chief building official, which shall be available for public inspection during normal business hours.

(1) Notice of interpretation. The community development director shall provide public notification upon the issuance of an interpretation. For general interpretations of the building code, the comprehensive plan or land development code, notice of the interpretation and appeal time-frame shall be advertised in a newspaper of general circulation in the city. For interpretations affecting a specific parcel of land, notice of the interpretation and appeal time-frame shall be advertised in a newspaper of general circulation, and mail notice of the interpretation shall be sent to all property owners within 300 feet of the property lines of the land for which the interpretation is effective.

(2) Effective time limits of an interpretation. An interpretation rendered by the community development director or the chief building official, as the case may be, shall remain in effect until the appropriate code section is amended to clarify the applicable provision or provisions which warranted the interpretation, or until such time as the interpretation is adopted, modified, or rejected as a result of an appeal to the board of zoning appeals and/or the building board of adjustments and appeals, by the applicant or other individual or entity. From the time the interpretation is rendered and the time the appropriate code section is amended, or in the case of an appeal, until such time as the board of zoning appeals and/or building board of adjustments and appeals has rendered its finding, no further request for interpretation regarding the same issue shall be permitted.

(3) Interpretations rendered by either the community development director or the chief building official are not final until the appeal period expires or the appeal, if filed, as concluded.

(g) Appeal to board of zoning appeals or construction board of adjustments and appeals. Within 30 days after receipt by the applicant or affected property owner of a written interpretation sent by certified mail return receipt requested by the community development director or chief building official, or within 30 days of publication of public notice of interpretation, the applicant, affected property owner, or aggrieved or adversely affected party may appeal the interpretation to the construction board of adjustments and appeals for matters relating to building and technical codes, or to the board of zoning appeals for all other matters in this code. For the purposes of this section, an affected property owner is defined as an owner of property located within 300 feet of the property lines of the land for which the interpretation is effective. An aggrieved or affected party is defined as any person or group of persons which will suffer an adverse effect to an interest protected or furthered by the city comprehensive plan, land development code, or building code(s). The alleged adverse interest may be shared in common with other members of the community at large, but shall exceed in degree the general interest in community good shared by all persons.

A request for appeal shall be filed in writing. Such request shall state the basis for the appeal and shall include any pertinent information, exhibits and other backup information in support of the appeal. A fee for the application and processing of an appeal shall be established at a rate set by the city council from time to time and shall be charged to and paid by the applicant. The board of zoning appeals or the construction board of adjustments and appeals, whichever is applicable, shall hold an advertised public hearing on the appeal and shall consider the interpretation of the community development director or chief building official, whichever is applicable, and public testimony in light of the comprehensive plan, the future land use map, the code or the official zoning atlas, or building code related matters, whichever is applicable. The board of zoning appeals or the building board of adjustments and appeals, whichever is applicable, shall adopt the community development director's or chief building official's interpretation, whichever is applicable, with or without modifications or conditions, or reject his interpretation. The board of zoning appeals or the building board of adjustments and appeals, whichever is applicable, shall not be authorized to modify or reject the community development director's or chief building official's interpretation unless such board finds that the determination is not supported by substantial competent evidence or that the interpretation is contrary to the comprehensive plan, the future land use map, the code or the official zoning atlas, or building code, whichever is applicable.

(h) Rules for interpretation of boundaries. Interpretations regarding boundaries of land use districts on the future land use map or boundaries of zoning districts on the official zoning atlas shall be made in accordance with the provisions of this section.

(1) District regulations extend to all portions of districts surrounded by boundaries. Except as otherwise specifically provided, a district symbol or name shown within district boundaries on the future land use map or the official zoning atlas indicates that district regulations pertaining to the district extend throughout the whole area surrounded by the boundary line.

(2) Where uncertainty exists as to the boundaries of land use districts as shown on the future land use map or boundaries of zoning districts as shown on the official zoning atlas, the following rules shall apply:

a. Boundaries indicated as approximately following the centerlines of dedicated streets, highways, alleys, or rights-of-way shall be construed as following such centerline as they exist on the ground, except where variation of actual location from mapped location would change the zoning status of a lot or parcel, in which case the boundary shall be interpreted in such a manner as to avoid changing the zoning status of any lot or parcel. In case of a street vacation, the boundary shall be construed as remaining in its location except where ownership of the vacated street is divided other than at the center, in which case the boundary shall be construed as moving with the ownership.

b. Boundaries indicated as approximately following lot lines, public property lines, and the like shall be construed as following such lines; provided however, that where such boundaries are adjacent to a dedicated street, alley, highway, or right-of-way and the zoning status of the street, highway, alley, or right-of-way and the zoning status of the street, highway, alley, or right-of-way [sic] is not indicated, the boundaries shall be construed as running to the middle of the street, highway, alley, right-of-way.

c. Boundaries indicated as approximately following city or county limits shall be construed as following such city or county limits.

d. Boundaries indicated as following mean high-water lines or centerlines or [of] streams, canals, lakes, or other bodies of water shall be construed as following such mean high-water lines or centerlines. In case of a change in mean high-water line, or of the course or extent of bodies of water, the boundaries shall be construed as moving with the change, except where such moving would change the zoning status of a lot or parcel; and in such case the boundary shall be interpreted in such a manner as to avoid changing the zoning status of any lot or parcel.

e. Boundaries indicated as entering any body of water but not continuing to intersect with other zoning boundaries or with the limits of jurisdiction of the city shall be construed as

extending in the direction in which they enter the body of water to intersection with other zoning boundaries or with the limits of city jurisdiction.

f. Boundaries indicated as following physical features other than those listed above shall be construed as following such physical features, except where variation of actual location from mapped location would change the zoning status of a lot or parcel, and in such manner as to avoid changing the zoning status of any lot or parcel.

g. Distances not specifically indicated on the official zoning atlas shall be determined by the scale of the map on the page of the atlas showing the property in question.

(i) Cases not covered above. In cases not covered above, or where the property or street layout existing on the ground is at variance with that shown on the official zoning atlas, the interpretation of the future land use map or the official zoning atlas shall be in accordance with the purpose and intent of the comprehensive plan and this code.

(j) Division of a lot of record by a boundary. Where a district boundary divides a lot of record at the time the boundary was established, and where the division makes impractical the reasonable use of the lot, the extension of the regulations for the front lot may be permitted as a conditional use for not to exceed 50 feet beyond the district line into the remaining portion of the lot.

(k) Continuity of zoning. In the event any unincorporated territory within Collier County shall seek annexation and hereafter become incorporated within the city, to insure that there shall be no lapse of zoning, then, any and all zoning regulations which may be in effect in such territory shall remain in full force and effect and shall continue to be administered and enforced by the city under this code until such time as municipal zoning within such territory shall be adopted and take effect.

(Ord. No. 02-04, § 4, 1-7-2002)

Sec. 30-5. - Vested rights.

(a) Administrative process. An applicant claiming that certain property rights have been vested prior to the effective date of these regulations will be provided an administrative process that will ensure adequate procedural due process including notice, public hearing, and the right to present and rebut evidence. The city council, acting as the board of zoning appeals (hereinafter BZA), subject to the procedures in this division shall issue formal findings of fact, conclusions of law, a finding of consistency or inconsistency with the comprehensive plan and the code and a determination of vested rights. The claim shall be administered as provided in this division.

(b) Application. An application for determination of vested rights shall be submitted in the form established by the community development director. An application for determination of vested rights shall be filed, if at all, within one year of the effective date of this code. Failure to file such application for a property within the one-year period shall forever waive and bar all claims for vested rights or equitable estoppel for such property, it being the express intent of the city that such development rights be "amortized" over the one-year period, plus if applicable, the additional two-year limitation period established herein. An application fee in an amount to be determined by the city council shall accompany and be part of the application. The application shall, at a minimum, include:

(1) Name, address, and telephone number of the owner and authorized applicant if other than the owner;

(2) Street address, legal description, and acreage of the property; and

(3) All factual information and knowledge reasonably available to the owner and applicant to address the criteria established in this code.

(c) Determination of completeness. The community development director shall determine whether the application submitted is complete. If he determines that the application is not complete, the community development director shall notify the applicant in writing of the deficiencies. The

community development director shall take no further steps to process the application until the deficiencies have been remedied.

(d) Review and determination or recommendation by the community development director and city attorney. After receipt of an application for determination of vested rights, the community development director and the city attorney shall review and evaluate the application in light of all of the criteria contained herein. Based on the review and evaluation, the community development director shall prepare a written recommendation to the BZA that the application should be denied, granted or granted with conditions. Such recommendation shall include findings of fact for each of the criteria established in this section to the extent that information is presented or obtained or inclusion is feasible or applicable.

(e) Review and determination of vested rights determination by the board of zoning appeals. Upon receipt by the BZA of the application for determination of vested rights and the written recommendation of the community development director, the BZA shall hold a public hearing on the application. At this hearing, the BZA shall take evidence and sworn testimony in regard to the criteria set forth in this section, and shall follow their rules of procedures, empowered to swear witnesses and take testimony under oath. Testimony shall be limited to the matters directly relating to the criteria and standards set forth in this section. The community development director shall represent the city, shall attend the public hearing, and shall offer such evidence as is relevant to the proceedings. The owner of the property and its authorized agents, may offer such evidence at the public hearing as is relevant to the proceedings and criteria. The order of presentation before the board of zoning appeals at the public hearing shall be as follows: (1) the city's summary of the application, written recommendation, witnesses and other evidence; (2) owner or applicant witnesses and evidence; (3) public witnesses and evidence; and (4) city rebuttal, if any.

(f) Issuance of vested rights determination by the board of zoning appeals. At the conclusion of the public hearing, the BZA shall consider the application for determination of vested rights, the recommendation of the community development director, and the evidence and testimony presented at the public hearing, in light of all of the criteria set forth in this section, and shall deny, grant, or grant with conditions the application for determination of vested rights for the property or properties at issue. The determination shall be in entered into the public record and shall include findings of fact for each of the applicable criteria, conclusions of law for each of such criteria, and a determination denying, granting, or granting with conditions, in whole or in part, the vested rights.

Within seven days of the public hearing, the community development director shall advise the applicant in writing, return receipt required, of the action taken by the board of zoning appeals.

(g) Appeal to circuit court. Within 30 days after issuance of the board of zoning appeals determination of vested rights, the owner or its authorized attorney or agent, may appeal the determination of vested rights by the board of zoning appeals to circuit court.

(h) Criteria for vested rights. This section is intended to strictly adhere to and implement existing Florida case law and statutory law as they relate to the doctrine of vested rights and equitable estoppel as applied to a local government exercising its authority and powers in zoning, the provision of adequate public facilities concurrent with development regulations, and related matters. It is the express intent of the city to require application of the provisions of this code to as much development and property as is legally possible without violating the legally vested rights which the owner may have obtained in accordance with Florida common law and statutory law, including F.S. § 163.3167(8). The criteria herein provided shall be considered in rendering a vested rights determination under this division. It is intended that each case be decided on a case-by-case factual analysis. An owner shall be entitled to a positive determination of vested rights only if he demonstrates by substantial competent evidence that he is entitled to complete his development without regard to the otherwise applicable provisions of this code based on the provisions of F.S. § 163.3167(8), or all three of the following requirements of the three-part test under Florida case law: (1) Upon some act or omission of the city, (2) a property owner relying in good faith, (3) has made such a substantial change in position or has incurred such extensive obligations and expenses that it would be highly inequitable and unjust to destroy the rights acquired.

(i) Limitation of determination of vested rights. A determination of vested rights which grants an application for determination of vested rights shall expire and be null and void unless either (1) construction is commenced pursuant to a final development order, final subdivision plat, or final site development plan, within two years after the issuance of the determination of the vested rights under this division, or (2) where substantial permanent buildings have been, or are being constructed or installed pursuant to a valid, unexpired, final development order, final subdivision plat, or final site development plan, shall continue in good faith until project completion. Failure to obtain a building permit within two years after the issuance of the determination of vested rights under this code shall rendered said vested rights to expire and become null and void. The aforementioned two-year time limitation on the determination of vested rights shall be stayed during any time periods within which commencement of construction pursuant to a final development order, final subdivision plat, or final site development plan is prohibited or deferred by the city solely as a result of lack of adequate public facilities to serve the property, pursuant to this code.

(j) Public notice. For purposes of this section due public notice shall mean at least 15 days' notice of the time, place and subject of such hearing published one time in a newspaper of general circulation in the area. Notice of the submission of an application for vested rights determination and, when applicable, of public hearings held pursuant to this division shall be prominently posted by the applicant on the property for which the vested rights determination is sought and shall be sent at the applicant's expense to property owners within 300 feet of the property lines of the subject property within 15 days of the date of receipt by the city of a completed application. Said notice shall briefly state the time and place of the hearing, the nature of the matter to be discussed and that written comments may be filed with the community development director.

(k) Public participation. Affected parties may submit written comments and pertinent factual information and data to the community development director. Such written comments and pertinent factual information and data may be submitted up to five days prior to the date set for the public hearing.

(Ord. No. 02-04, § 5, 1-7-2002)

Sec. 30-6. - Nonconformities.

(a) Generally. Within the zoning districts established by the land development code or amendments that may later be adopted, there may exist lots, structures, uses of land, water and structures, and characteristics of use which were lawful before this code was adopted or amended, but which would be prohibited, regulated, or restricted under the terms of this code or future amendments. It is the intent of this division to permit these nonconformities to continue until they are voluntarily renovated or removed as required by this code, but not to encourage their survival. It is further the intent of the land development code that the nonconformities shall not be enlarged upon, expanded, intensified, or extended, nor be used as grounds for adding other structures or uses prohibited elsewhere in the same district.

(b) Declaration. Nonconforming uses are declared by this division to be incompatible with permitted uses in the districts involved. A nonconforming use of a structure, a nonconforming use of land or water, or a nonconforming use of structure, land or water in combination shall not be extended or enlarged after the effective date of this code or relevant amendment thereto by attachment on a structure or premises of additional signs intended to be seen from off the premises, or by the addition of other uses of a nature which would be prohibited generally in the district involved, except as provided for herein.

(c) Vested projects. To avoid undue hardship, nothing in this code shall be deemed to require a change in the plans, construction, or designated use of a building or property on which a building permit had been applied for prior to the effective date of adoption of relevant amendment of this code.

In addition, nothing in this code shall be deemed to require a change in the plans, construction, or designated use of any property for which a development plan was lawfully required and approved prior to the effective date of adoption of relevant amendment of this code, provided that such plan shall expire

two years from the date of said approval, or one year from the date of adoption of this code, whichever shall first occur, if no actual construction has been commenced; and thereafter, all development shall be in accordance with the zoning regulations then in effect. Any such approved plat or plan may be amended by approval of the city council, provided the degree of nonconformity with this code shall not be increased.

(d) Nonconforming lots of record. In any district, any permitted or permissible structure may be erected, expanded, or altered on any lot of record at the effective date of adoption or relevant amendment to this code.

The minimum size yard requirements in any commercial district shall be equal to the height of the proposed principal structure, or the minimum side yard requirement in the district, whichever is lesser.

(e) Nonconforming uses of lands or waters or structures only. Where, at the effective date of adoption or relevant amendment of this code, lawful use of lands or waters exists which would not be permitted under this code, the use may be continued, so long as it remains otherwise lawful, provided:

(1) Enlargement, increase, intensification, alteration. No such nonconforming use shall be enlarged, intensified, increased, or extended to occupy a greater area of land, structure, or water than was occupied at the effective date of adoption or relevant amendment of this land development code, except a single-family, duplex, or mobile home use as provided for below.

(2) Movement. No such nonconforming use shall be moved in whole or in part to any portion of the lot or parcel other than that occupied by such use at the effective date of adoption or relevant amendment of this land development code.

(3) Discontinuance. If any such nonconforming use ceases for any reason (except where governmental action impedes access to the premises) for a period of more than 180 consecutive days, any subsequent use of land shall conform to the regulations specified by this code for the district in which such land is located.

Notwithstanding the above definitions of discontinuance relative to a nonconforming use of land or water or structure, where the use of land, water or a structure has ceased for a period of more than 90 consecutive days, and where such property or use is deficient in the required amount of paved, striped parking, including parking and access to the structure for the disabled; water management facilities; landscaping; and other site improvements as required by this code, prior to the recommencement of any use of land, water or structure, said deficiencies as may apply shall be remedied, to the greatest extent possible given the physical constraints on the property, via the appropriate administrative processes, or as otherwise required by this code.

(4) Subdivision or structural additions. No land in nonconforming use shall be subdivided, nor shall any structures be added on such land except for the purposes and in a manner conforming to the regulations for the district in which such land is located; provided, however, that subdivision may be made which does not increase the degree of nonconformity of the use.

(5) Nonconformities not involving the use of a principal structure. Nonconformities not involving the use of a principal structure, including, but not limited to, open storage, building supplies, vehicles, mobile homes, trailers, equipment and machinery storage, and the like, shall be discontinued within one year of the effective date of this code or relevant amendment of this code.

(f) Extension of use in building manifestly designed for such use. Any nonconforming use may be extended throughout any parts of a building which were manifestly arranged or designed for such use at the effective date of adoption or relevant amendment of this code. Any nonconforming use which occupied a portion of a building not originally designed or intended for such use shall not be extended to any other part of the building. No nonconforming use shall be extended to occupy any land outside the building, nor any additional building on the same lot or parcel, not used for such nonconforming use at the effective date of adoption or relevant amendment of this code.

(g) Change in tenancy or ownership. There may be a change in tenancy, ownership, or management of a nonconforming use provided there is no change in the nature or character of such nonconforming use.

(h) Change in use. If no structural alterations are made, any nonconforming use of a structure, or of a structure and premises in combination may be changed to another nonconforming use of the same character, or to a more restricted nonconforming use, provided the board of zoning appeals, upon application to the community development director, shall find after public notice and hearing that the proposed use is equally or more appropriate to the district than the existing nonconforming use and that the relation of the structure to surrounding properties is such that adverse effect or occupants and neighboring properties will not be greater than if the existing nonconforming use is continued. In permitting such change, the board of zoning appeals may require appropriate conditions and safeguards in accordance with the intent and purpose of this code.

(i) Casual, temporary, or illegal use. The casual, temporary, or illegal use of land or structures, or land and structures in combination, shall not be sufficient to establish the existence of a nonconforming use or to create rights in the continuance of such use.

(j) Uses under conditional use provisions not nonconforming uses. All uses lawfully existing on the effective date of this code which are permitted as a conditional use in a district under the terms of this code shall not be deemed a nonconforming use in such district, but shall without further action be deemed to have a conditional use permit.

(k) Change to conforming use requires future conformity with district regulations. Where a structure, or structure and premises in combination, in or on which a nonconforming use is replaced by a permitted use shall thereafter conform to the regulations for the district in which the structure is located, and the nonconforming use shall not thereafter be resumed nor shall any other nonconforming use be permitted.

(l) Nonconforming structures. Where a structure lawfully exists at the effective date of the adoption of this article or relevant amendment that could not be build under this code by reason of restrictions on lot area, lot coverage, height, yards, location on the lot, or requirements other than use concerning the structure, such structure may be continued so long as it remains otherwise lawful, subject to the following provisions:

(1) No such nonconforming structure may be enlarged or altered in a way which increases its nonconformity, but any structure or portion thereof may be altered to decrease its nonconformity; provided, however, that the alteration, expansion, or replacement of nonconforming single-family dwellings, duplexes or mobile homes shall be permitted in accordance with this code.

(2) Should such nonconforming structure or nonconforming portion of a structure be destroyed by any means to an extent of more than 50 percent of its actual replacement cost at time of destruction, as determined by a cost estimate submitted to the community development director, it shall not be reconstructed except in conformity with provisions of this zoning code or the city's post-disaster redevelopment ordinance (Ordinance No. 01-24).

(3) Should such structure be moved for any reason for any distance whatever, other than as a result of governmental action, it shall thereafter conform to the regulations of the district in which it is located after it is moved.

(4) Nonconforming residential structures, which for the purpose of this section shall mean detached single-family dwellings duplexes or mobile homes in existence at the effective date of this zoning code or its relevant amendment and in continuous residential use thereafter, may be altered, expanded, or replaced upon recommendation of the city planning board and approval of the board of zoning appeals by resolution.

(5) Not withstanding the foregoing restrictions as to reconstruction, any residential structure or structures in any residential zone district may be rebuilt after destruction to the prior extent height and density of units per acre regardless of the percentage of destruction, subject to

compliance with the applicable building code requirements in effect at the time of redevelopment. In the event of such rebuilding, all setbacks and other applicable district requirements shall be met unless a variance there for is obtained from the board of zoning appeals. For the purpose of this division, a hotel, motel, or boatel shall be considered to be a residential structure.

(6) Since the size and nature of the alteration, expansion or replacement of such nonconforming structures may vary widely, a site plan, and if applicable, preliminary building plans indicating the proposed alteration, expansion or replacement shall be presented with each petition. Prior to granting such alteration, expansion or replacement of a nonconforming single-family dwelling, duplex or mobile home, the planning board and the city council shall consider and base its approval on the following standards and criteria:

a. The alteration, expansion or replacement will not increase the density of the parcel or lot on which the nonconforming single-family dwelling, duplex or mobile homes located;

b. The alteration, expansion or replacement will not exceed the building height requirements of the district most closely associated with the subject nonconforming use;

c. The alteration, expansion or replacement will not further encroach upon any nonconforming setback;

d. The alteration, expansion or replacement will not decrease or further decrease the existing parking areas for the structure;

e. The alteration, expansion or replacement will not damage the character or quality of the neighborhood in which it is located or hinder the proper future development of the surrounding properties; and

f. Such alteration, expansion or replacement will not present a threat to the health, safety or welfare of the community or its resident.

(m) Replacement of mobile homes. Prior to issuance of any building permit for replacement of a mobile home, the property owner or authorized agent shall provide the community development director, or his designee, with three copies of a scaled drawing of the subject parcel which indicates:

(1) Proof of building permit issuance for structure being replaced.

(2) The location of the structure to be replaced and its relationship to adjacent mobile homes and parcel boundaries.

(3) Further, mobile homes located in either the C-4 or C-5 zoning district shall comply with replacement criteria contained in the land development code.

(n) Destruction of major structure or structures. When nonconforming use status applies to a major structure or structures, or to a major structure or structures and premises in combination, removal or destruction of the structure or structures shall eliminate the nonconforming status of the land. "Destruction" of the structure for purposes of this subsection is hereby defined as damage to the extent of more than 50 percent of the replacement cost at the time of the destruction. Upon removal or destruction as set out in this section, the use of land and structures shall therefore conform to the regulations for the district in which such land is located.

(o) Repairs and maintenance. On any nonconforming structure or portion of a structure and on any structure containing a nonconforming use, work may be done in any period of 12 consecutive months on ordinary repairs, or on repair or replacement of nonbearing walls, fixtures, wiring, or plumbing to an extent not exceeding 20 percent of the current assessed valuation of the structure (or of the nonconforming portion of the structure if a nonconforming portion of a structure is involved), provided that the cubic content of the structure existing at the date it becomes nonconforming shall not be increased except subject further to the exception provided herein.

(p) Nonconforming structures unsafe because of lack of maintenance. If a nonconforming structure or portion of a structure, or any structure containing a nonconforming use becomes physically unsafe or

unlawful due to lack of repairs or maintenance, and is declared by the duly authorized official of the city to be unsafe or unlawful by reason of physical condition, it shall not thereafter be restored, repaired, or rebuilt except in conformity with the regulations of the district in which it is located.

(q) Nonconforming structures unsafe for reasons other than lack of maintenance. If a nonconforming structure or portion of a structure, or any structure containing a nonconforming use, becomes physically unsafe or unlawful for reasons other this lack of repairs or maintenance, nothing contained herein shall be deemed to prevent the strengthening or restoring to a safe condition of such building or part thereof declared to be unsafe by the authorized official of the city charged with the public safety; provided, however, that where such unsafe condition(s) or unlawfulness is the result of damage from destruction, the percentage of damage limitations set out above, as the case may be, shall apply.

(Ord. No. 02-04, § 6, 1-7-2002)

Sec. 30-7. - Enforcement.

(a) General. The provisions of this code shall be enforced (1) by the code enforcement board and (2) by the city council through its authority to enjoin and restrain any person violating the code. The city manager, or his designee, shall have the right to inspect those lands, waters or structures affected by this code and to issue citations for violations.

The term "city manager" as used in this code shall mean the city manager or his/her designee.

(b) Violation. Whenever, by the provisions of this code, the performance of any act is required, or the performance of any act is prohibited, or whenever any regulation or limitation is imposed on the use or development of any land or water, or on the erection of a structure, a failure to comply with such provisions shall constitute a violation of this code.

(c) Complaints regarding violations. Whenever a violation of this code occurs, or is alleged to have occurred, any person may file a complaint. Such complaint stating fully the causes and basis thereof shall be filed with the city manager. The city manager, or his designee, shall record properly such complaint, investigate, and take action thereon as provided by this code. He shall maintain as a public record, in his office, the dispositions made of the complaint.

(d) Liability. Any owner, tenant, or occupant of any land or structure, or part thereof, and any architect, engineer, builder, contractor, or any other agent, or other person, firm or corporation, either individually or through its agents, employees, or independent contractor, who violates the provisions of this code, or who participates in, assists directs, creates, or maintains any situation that is contrary to the requirements of this code, shall be held responsible for the violation and be subject to the penalties and remedies provided herein or as otherwise provide by statute or ordinance.

(e) Procedures upon discovery of violations. Upon the determination that any provision of this code is being violated, the city manager or his designee, may prosecute said violation before the code enforcement board in accordance with the provisions of Ordinance No. 98-19 as may be amended from time to time, or its successor ordinance.

In cases where delay would seriously threaten the effective enforcement of this code or pose a danger to the public health, safety, or general welfare, the city manager may seek enforcement without prior written notice by invoking any of the remedies contained in this code or otherwise provided by law.

Each calendar day that any violation continues after receipt of a written notice of such violation shall constitute a separate violation and a separate offense for purposes of the penalties and remedies specified herein.

In addition to the penalties and remedies above, the city manager may institute any appropriate actions or proceedings to prevent, restrain, correct, or abate a violation of this code, as provided by law.

(f) Civil penalties and remedies.

(1) Cease and desist orders. The city manager is authorized to issue cease and desist orders in the form of written official notices sent by registered mail to the person(s) responsible for the violation.

(2) Revocation of building permits, certificates of occupancy, or other development orders, permits or approvals. The city manager may revoke any building permit, certificate of occupancy, development order, development permit, or development approval, whatsoever, in those cases where an administrative determination has been duly made that, relevant to the provisions and requirements of this code, false statements or misrepresentations existed as to material fact(s) in the application or plans upon which the permit or approval was based.

(3) Suspension of building permits, certificates of occupancy, or other development orders, permits or approvals. The city manager may, to the extent permitted by law, suspend any building permit, certificate of occupancy, development order, development permit, or development approvals whatsoever, where an administrative determination has been duly made that, relevant to the provisions and requirements of this code, an error or omission on either the part of the applicant or government agency existed in the issuance of the permit or approval. A valid permit or certificate shall be issued in place of the incorrect permit or certificate after correction of the error or omission.

(4) Stop work order. For any violation of the provisions of this code which constitutes a threat to life or to public or private property, the city manager shall have the authority to issue a stop work order in the form of a written official notice given to the owner of the subject property or to his agent or to the person doing the work where such a violation has been committed or exists. Upon notice from the city manager that any action or work is occurring contrary to the provisions of this code, and it constitutes a threat to life or to public or private property, such action or work shall immediately be stopped. The notice shall state the conditions under which the action or work may be resumed. Where any emergency exists, oral notice given by the city manager shall be sufficient.

(g) Notice and appeal. All administrative decisions concerning the issuance, revocation, suspension, or stop work order, or other remedy pertaining to building permits, certificates of occupancy, development orders, development permits, or development approvals, whatsoever, shall be stated in official written notice sent by certified mail to the permit applicant. Decisions of the city manager may be appealed to the board of zoning appeals, code enforcement board, or building board of adjustments and appeals as may be applicable.

(Ord. No. 02-04, § 7, 1-7-2002)

Sec. 30-8. - Fees.

(a) Establishment of schedule of fees, costs and other charges. The city council shall, from time to time, establish and adopt by resolution, a schedule of fees and charges for application and document processing, public meetings, public hearings, other meetings and hearings, transcripts, approvals, denials, and development permits, development orders, development, construction, interpretations, enforcement, inspection services, sales of documents, review, resubmission, and any other zoning or development related services, and any other services provided or costs incurred by or on behalf of the city.

(b) Maintenance and amendment of schedule. The schedule of fees, costs and other charges shall be maintained in the city clerk's office and shall be available for public inspection during normal business hours. Additional copies or part or all of the schedule of fees, costs and other charges may be maintained in other appropriate city departments. The schedule of fees, costs and other charges may be amended, modified or otherwise changed in accordance with standard resolution adoption and amendment procedures of the city council. Repeal, amendment or adoption of the schedule of fees, costs and other charges shall not be subject to procedures otherwise required for adoption or amendment of this code.

(c) Payment of fees, costs, and other charges. The appropriate fees, costs, and other charges specified in the schedule of fees, costs and other charges shall be submitted with, and paid at the time of, initial application submission or other initial document submission except a otherwise specified in this code or the schedule of fees, costs, and other charges. The applicant, or if no applicant, the person requesting the city service, document, or other item, shall be responsible for the payment of all fees, costs and other charges identified in the schedule of fees, costs and other charges, except as expressly provided otherwise in this code or the schedule of fees, costs, and other charges. The fees, costs, and other charges specified in the schedule of fees and costs and other charges shall be twice the amount listed for petitions or requests applied for after-the-fact, with the exception of minor after-the-fact encroachment requests. Until the applicable fees, costs and other charges have been paid in full, no action or activity of any type or kind shall be taken on an application, petition, or request. The provisions contained in this section shall not apply to any impact fee ordinance.

(Ord. No. 02-04, § 8, 1-7-2002)

Sec. 30-9. - Amendments to this code.

Unlimited amendments to this code may be made until June 30, 2002, and thereafter on a quarterly basis beginning July 1, 2002, except:

(1) Amendments to the Marco Island Official Zoning Atlas may be made more often than four times through July 1, 2002.

(2) After July 1, 2002 amendments may be made to the Marco Island Official Zoning Atlas more often than four times per year if related to, and if submitted and reviewed in conjunction with the following types of development orders: rezoning, PUD amendment, development of regional impact (DRI) approval, DRI amendment, conditional use, site development plan (SDP) approval, SDP amendment, subdivision approval (including plats, plans, and amendments), construction approval for infrastructure (including water, sewer, grading, paving), and building permit (for single-family dwelling only).

(3) In case of emergency, amendments to this code may be made more often than four times per year if the additional code amendment receives the approval of five-sevenths of the members of the council. For this purpose, "emergency" means any occurrence or threat thereof whether accidental or natural, caused by man, in war or peace, which results or may result in substantial injury or harm by the population or substantial damage to or loss of property or public funds.

(4) Procedure. The procedure for amendment to this code shall be as provided herein. This code may only be amended in such a way as to preserve the consistency of the code with the comprehensive plan.

(Ord. No. 02-04, § 9, 1-7-2002)

Sec. 30-10. - Definitions.

(a) Purpose and intent. The purpose of this section is to provide definitions for certain terms and expressions contained in the land development code which expand upon, and/or provide clarity, for application on Marco Island, Florida. In the interpretation and application of any provision of this section, it shall be held to be the minimum requirement adopted for the promotion of the public health, safety, comfort, convenience and general welfare. Where any provision of this section, the land development code, the comprehensive plan, or any other law or regulation in effect in the city, imposes greater restrictions upon the subject matter than any other provision of this section, the land development code, the comprehensive plan, or any other law or regulation in effect in the city, the provision imposing the greater restriction or regulation shall be deemed to be controlling. It is the intent of the section that in all circumstances, the provisions of these regulations shall be interpreted and construed to be consistent with the comprehensive plan. Where any provision(s) of this section

are determined to be in conflict with the comprehensive plan, the comprehensive plan shall control. Further, all provisions, terms, phrases and expressions contained in this section shall be liberally construed in order that the true intent and meaning of city council may be fully carried out.

(b) General provisions.

(1) Text. In case of any difference of meaning or implication between the text of this code and any figure, the text shall control.

(2) Computation of time. The time within which an act is to be done shall be computed by excluding the first and including the last day; if the last day is a Saturday, Sunday or legal holiday, that day shall be excluded.

(3) Day. The word "day" shall mean a calendar day.

(4) Gender. Words importing the masculine gender shall be construed to include the feminine and neuter.

(5) Month. The word month shall mean 30 calendar days, unless a calendar month is indicated.

(6) Nontechnical and technical words. Words and phrases shall be construed according to the common and approved usage of the language, but technical words and phrases and such others as may have acquired a peculiar and appropriate meaning in law shall be construed and understood according to such meaning.

(7) Number. A word importing the singular number only may extend and be applied to several persons and things as well as to one person and thing. The use of the plural number shall be deemed to include any single person or thing.

(8) Shall, may. The word "shall" is mandatory; "may" is permissive.

(9) Tense. Words used in the past or present tense include the future as well as the past or present.

(10) Week. The word "week" shall be construed to mean seven calendar days.

(11) Written or in writing. The term "written" or "in writing" shall be construed to include any representation of words, letters or figures whether by printing or other form or method of writing.

(12) Year. The word "year" shall mean 365 calendar days, unless a fiscal year is indicated, or unless a calendar year is indicated.

(c) Definitions enumerated. [The following words, terms and phrases, when used in this chapter, shall have the meanings ascribed to them in this section, except where the context clearly indicates a different meaning:]

Abutting property or adjacent property means properties having a boundary line or a portion of a boundary line in common with no intervening public street or right-of-way.

Access means the principal means of ingress and egress to a lot from a publicly dedicated right-of-way, private right-of-way, or approved vehicular access easement.

Accessory use or structure means a use or structure of a nature customarily incidental and subordinate to the principal use or structure and, unless otherwise provided, on the same premises.

Adult day care center means any building or buildings or other place, whether operated for profit or not, which undertakes through its ownership or management to provide for a part of the 24-hour day, basic services to three or more adults not related to the owner/operator by blood or marriage, who require such services.

Affordable housing means a qualified dwelling unit or project, which is offered for sale or rent and meets specific eligibility criteria as contained in the housing element of the comprehensive plan.

Affordable housing density bonus (AHDB) means an award of a number of residential dwelling units per gross acre in a development which allows the base density to be increased by density bonuses related to the provision of affordable housing. (See section 30-67).

Affordable housing density bonus (AHDB) program means the program which implements the affordable housing density bonus provisions of the comprehensive plan. (See section 30-67).

Affordable housing density bonus (AHDB) rating system. See section 30-67.

Affordable housing owner-occupied unit. See section 30-67.

Affordable housing rental unit. See section 30-67.

Alley means a public or approved private way which affords a secondary means of access to abutting commercial properties and which is not intended for general traffic circulation.

Alter or alteration (mangrove) means to cut, remove, defoliate, or otherwise destroy mangroves, but shall not mean selective trimming of mangroves as defined in Rule 17-321.020(12), F.A.C.

Annual update and inventory report or AUIR means the city report on public facilities. See concurrency management, article X of this chapter.

Applicant means the owner of record of property, or his authorized agent, making a submission to the city pursuant to this code.

Assisted listing facility (ALF) means any building(s), section of a building, distinct part of a building, residence, private home, boarding home, or other place, whether operated for profit or not, which undertakes through its ownership or management to provide for a period exceeding 24 hours, housing, food service, and one or more personal services for four or more adults, not related to the owner or administrator by blood or marriage, who require such services and to provide limited nursing services, when specifically licensed to do so pursuant to F.S. § 400.407. The facility shall be licensed and approved as such by the state department of health and rehabilitative services. A facility offering personal services or limited nursing services for fewer than four adults is within the meaning of this definition if it formally or informally advertises to or solicits the public for residents or referrals and holds itself out to the public to be an establishment which regularly provides such services.

Authorized agent means Any person authorized in writing by the owner of record to act on the behalf of the owner of record of a particular parcel of land.

Base density means the number of residential dwelling units per gross acre permitted.

Beach means the soft sand portion of land lying seaward of a seawall or line of permanent vegetation and landward of the mean high water line.

Beautification committee means the beautification advisory committee created by a resolution of the city council.

Bicycle path means That portion of a street, cross-walkway and the like, paved or otherwise, intended for the use of bicycles, and if properly sized, for pedestrians.

Boat dock. See chapter 54, article IV.

Boat yard and ways means a premises or site used as a commercial establishment for the provision of all such facilities as are customary and necessary to the construction, reconstruction, repair, maintenance or sale of boats, marine engines or marine equipment and supplies of all kinds including, but not limited to, rental of covered or uncovered boat slips or dock space or enclosed dry storage space or marine railways or lifting or launching services, and for dredge or barge dockage and storage.

Boatel means a facility offering transient lodging accommodations normally on a daily rate for boat travelers. These accommodations include wet boat slips, where guests may or may not sleep on their boat, that are normally combined with a hotel/motel and its accessory uses, such as a restaurant.

Bottle club means a private establishment where patrons may purchase bottles of liquor or bring their own and keep them for consumption after legal closing hours.

Breast height means the height of four and one-half feet above the ground.

Buildable area means the portion of a lot or parcel remaining after required yards have been provided. Buildings may be placed in any part of the buildable area, but limitations on the percentage of the lot that may be covered by buildings may require open space within the buildable area.

Building means any structure, either temporary or permanent, built for the support, shelter, or enclosure of persons, chattels, or property of any kind. This term shall include tents, trailers, mobile homes or any vehicles serving in any way the function of a building. This term shall not include temporary construction sheds or trailers erected to assist in construction and maintained during the term of a building permit.

Building, height of means the overall height of a building as measured from the required flood elevation or average sidewalk elevation, whichever is higher, to (1) the top of the roof for flat roofs, (2) the deck lines for mansard roofs, or (3) the average height between eaves and ridge for gable, hip and gambrel roofs. For properties for which there is no FEMA finished floor elevation required, the starting point shall be the greater of the following:

(1) Eighteen inches above the state department of environmental protection requirement for the first habitable floor structural support.

(2) Eighteen inches above the elevation of the average crown of the adjacent road(s); or

(3) The average natural grade (the natural contours of a land area generally unaltered by man's intervention).

Bulkhead means a retainer wall or structure designed to prevent erosion of land by water action.

Bulkhead line means a fixed line established in or along the Gulf of Mexico, a river, watercourse, or other body of water, in order to fix and establish the distance from the shoreline within which filling may be permitted and bulkheads constructed.

Caliper means the minimum trunk diameter of a tree as measured at a predetermined required point of measurement. Trunk diameter for trees up to four inches shall be measured six inches above the soil line. All trees over four inches in diameter shall be measured 12 inches above the ground.

Canopy means the upper portion of the tree consisting of limbs, branches and leaves.

Care unit means a residential treatment facility, where, for compensation (if applicable), persons under care receive food, lodging and some form of on-site therapeutic care on a daily basis. This type of care may involve psychiatric, psychological, medical, physiological therapies, behavior modification and other such services. This type of facility shall contain 15 or more persons under care, plus resident supervisors as required by subsection 10A-5.019, F.A.C., and shall permit all of the list of uses as permitted by group care facilities (category I and category II), (i.e., assisted living facilities; foster care facilities; facilities for: aged persons, developmentally disabled persons (as defined in F.S. § 393.063(10), as amended), physically disabled or handicapped persons (as defined in F.S. § 760.22(7)(a), as amended); crisis and attention care; displaced adult care; homeless shelters; mental and emotional health care; offender halfway houses; spouse abuse care; substance abuse care; and youth shelters).

Carport means an accessory structure, consisting of a roof and supporting members, such as columns or beams, not enclosed from the ground to the roof on at least two sides, and designed or used for the storage of motor-driven vehicles.

Certified archaeologist means an archaeologist who meets the professional qualifications standards outlined in the Secretary of the Interior's Standards and Guidelines for Archaeology and Historic Preservation.

Certified survey means certified survey, map of survey, sketch of survey, plat of survey, right-of-way survey, or other similar titles shall mean any drawing of a parcel or tract of real property used for the purpose of depicting the results of a field survey. Each survey drawing shall state the type of survey it depicts as defined in Rule 21 HH-6, Minimum Technical Standards, and be certified by a professional land surveyor.

Change of occupancy means the discontinuance of an existing use and the substitution therefor of a use of a different kind or class. Change of occupancy is not intended to include a change of tenants or proprietors unless accompanied by a change in the type of use.

Child care center means an establishment which provides for the care, protection, and supervision of a child, for a period of less than 24 hours a day on a regular basis, which supplements parental care, enrichment, and health supervision for the child, in accordance with his individual needs, and for which a payment, fee or grant is made for care. This definition includes such terms as day nurseries, day care service, day care agency, nursery school, or play school. The term does not include summer camps or family day care homes.

City means the City of Marco Island.

City council means the city council for the City of Marco Island.

City manager means the city manager for the City of Marco Island.

Club, private means those associations and organizations of a civic, fraternal or social character not operated or maintained for profit, and to which there is no unrestricted public access or use.

Coastal construction control line (CCCL) means the Collier County coastal construction control line as depicted on the state department of natural resources, division of beaches and shores, March, 1985, aerial map as adopted in Collier County Ordinance 80-19 (1980), or any subsequent modifications.

Commercial equipment means any equipment commonly used in a commercial business, regardless if said equipment is actually owned or utilized by a business.

Commercial vehicle means any vehicle used in conjunction with a commercial or business activity, or possessing the following characteristics: Any motor vehicle not recreational in nature having a rated load capacity of greater than one ton, exceeding 7½ feet in height, seven feet in width, and/or 25 feet in length. The display of lettering or a similar sign upon a vehicle shall not in and of itself make a vehicle commercial.

Comprehensive plan means the adopted plan approved in accordance with F.S. ch. 163, as amended, and F.A.C. ch. 9J-5, and consisting of two parts: (1) Goals, objectives and policies; and (2) supporting data and analysis. Said plan is referred to as the city comprehensive plan.

Conditional use means a use that would not be appropriate generally or without restriction throughout a zoning district, but which if controlled as to number, area, location, or relation to the neighborhood would promote the public health, safety, welfare, morals, order, comfort, convenience, appearance, prosperity, or the general welfare. Such uses may be permissible in a zoning classification or a district as a conditional use if specific provision for such a conditional use is made in this land development code.

Condominium means that form of ownership of real property which is created pursuant to the provisions of F.S. ch. 718.

Conservation area means a parcel containing an archaeological site, a native habitat, either wetland or upland, or a threatened or endangered species, which shall be subject to a limited development compatible with conservation of the natural resources therein.

Conservation easement means an easement granted for limited use purpose maintaining in perpetuity a conservation or preserve area, and for which a dedication shall be granted.

Continuing care retirement community (CCRC) means a living environment providing shelter, food, and either nursing care or personal service as defined in F.S. § 400.402(17), whether such nursing care or personal services are provided in the facility or in another setting designated by the agreement for continuing care, to an individual not related by consanguinity or affinity to the provider furnishing such care, upon payment of an entrance fee, which is licensed by the department of insurance of the state pursuant to F.S. ch. 651.

dbh (diameter at breast height) means the diameter of the trunk, limb, or stem material measured at the point or points of the tree located 4½ feet from where the tree emerges from the substrate. In the case

of multi-trunked trees, the dbh is measured by the sum of diameters of each trunk at the point or points located 4½ feet from where the tree emerges from the substrate.

Dead tree means a tree which has lost its ability to absorb nutrients and no longer produces live foliage or green wood during its normal growing season.

Density, residential means the number of residential dwelling units permitted per gross acre of land and determined by dividing the number of units by the total area of residential land within the boundaries of a lot or parcel.

Department means a department within the City of Marco Island as designated by the city manager.

Destination resort hotels means a transient lodging facility where generally patrons stay for several days in order to utilize, enjoy or otherwise participate in certain amenities, natural or man-made, such as frontage on or access to the Gulf of Mexico, ability to use a golf course or courses, and other recreational amenities all of which serve to encourage occupancy by persons who primarily patronize the destination resort hotels for those specific purposes as opposed to a visitor to the area in general or otherwise conducting a business activity.

Developer means any person, including a governmental agency, or his designated agents, successors, or assigns, undertaking any development as defined in this code.

Development has the meaning given it in F.S. § 380.04(1).

Development agreement has the meaning contemplated in chapter 38, article III.

Development order means any order, permit, determination, or action granting, denying, or granting with conditions an application for any final local development order, building permit, temporary use permit, temporary construction and development permit, sign permit, spot survey, electrical permit, plumbing permit, occupational license, boat dock permit, HVAC permit, right-of-way permit, construction approval for infrastructure (including water, sewer, grading, paving), approved development of regional impact (DRI), zoning ordinance amendment, comprehensive plan amendment, flood variance, coastal construction control line variance, vegetation removal permits, site development plan approval, subdivision approval (including plats, plans, variances, and amendments), rezoning, PUD amendment, certification, conditional use (provisional use), variance, or any other official action of the city having the effect of permitting development as defined in this code.

Diseased tree means a tree which is degenerated or damaged to the point where the death of the tree is imminent or to the point where the tree poses a significant hazard to the general public.

Dock facility. See chapter 54, article IV.

Dormitory housing means a room or rooms, partitioned or open, which may or may not provide cooking facilities and provides sleeping quarters for a number of unrelated persons. Dormitory housing shall meet all applicable requirements of the city's building codes.

Drinking establishment means an establishment deriving 51 percent or more of its gross revenue from the sale and on-premises consumption of alcoholic beverages. Drinking establishments may include bars, cocktail lounges, taverns and other similar establishments.

Dripline means a line extending vertically between the outermost portion of the tree crown and the ground.

Dwelling means any building, or part thereof, intended, designed, used or occupied in whole or in part as the residence or living quarters of one or more persons, permanently or temporarily, continuously or transiently, with cooking and sanitary facilities.

Dwelling, duplex means a single, freestanding, conventional building on a single lot, which contains only two dwelling units and is intended, designed, used and occupied as two dwelling units under single ownership, or where each dwelling unit is separately owned or leased but the lot is held under common ownership.

Dwelling, multiple-family means a group of three or more dwelling units within a single conventional building, attached side by side, or one above another, or both, and wherein each dwelling unit may be individually owned or leased initially on land which is under common or single ownership. For purposes of determining whether a lot is in multiple-family dwelling use, the following considerations shall apply:

(1) Multiple-family dwelling uses may involve dwelling units intended to be rented and maintained under central ownership and management, or cooperative apartments, condominiums, and the like and may include the fee ownership of land beneath each dwelling unit following development from a common base of ownership.

(2) Guesthouses and servants' quarters shall not be considered as dwelling units in the computation of subsection (1) above.

(3) Any multiple-family dwelling in which dwelling units are available for rental for periods of less than one week shall be considered a tourist home, a motel, motor hotel, or hotel, as the case may be, and shall only be permitted in districts where specifically designated.

(4) For the purpose of this land development code, timeshare estate facilities shall be considered as intended primarily for transient occupancy and shall only be permitted in districts where specifically designated.

Dwelling, single-family or one-family means a building which (1) contains only one dwelling unit; (2) is intended, designed, used and occupied by no more than one family; (3) meets the minimum width across any front, side or rear elevation of 24 feet; and (4) meets the minimum floor area and maximum height requirements of this code. The following conditions are as much a part of the definitions as the principal definition:

(1) The dwelling shall comply with the minimum square footage requirements for single-family dwellings of this code for the district in which it is located.

(2) The dwelling shall be connected to a public sewer and water supply or to such private facilities approved by the county health department.

(3) On-site built as well as manufactured homes must be firmly attached to a permanent foundation constructed on the site in accordance with the state building code.

(4) A mobile home shall not be permitted in zoning districts that allow single-family dwellings as permitted uses unless the term mobile home is expressly stated as a permitted or conditional use.

Dwelling, two-family means a single, freestanding, conventional building intended, designed, used and occupied as two dwelling units attached by a common wall or roof, but wherein each unit is located on a separate lot under separate ownership.

Dwelling unit means a room or rooms connected together, constituting a separate, independent housekeeping establishment for no more than one family, and physically separated from any other rooms or dwelling units which may be in the same structure. A dwelling unit must contain sleeping and sanitary facilities and a primary kitchen.

Easement means an interest in land owned by another that entitles its holder to a specific limited use or enjoyment.

Eating establishment means an establishment deriving 51 percent or more of its gross revenue from the retail sale of food and nonalcoholic beverages for on-premises or immediate consumption. Eating establishments may include drive-through restaurants, fast food restaurants, sit-down restaurants, walk-up restaurants, and takeout prepared food stores as defined by this code.

Effectively destroy means to cause, suffer, allow or permit any act which will cause a tree to die or go into a period of unnatural decline within a period of one year from the date of the act. Acts that may effectively destroy a tree include, but are not limited to, damage inflicted upon the root system by heavy machinery, excessive trimming, changing the natural grade above the root system or around the trunk, damage inflicted on the tree permitting infection or pest infestation, application of herbicides or other

chemical agents or intentional fire damage to the tree permitting infection or pest infestation, the infliction of a trunk wound that is 50 percent or greater of the circumference of the trunk, or the removal of sufficient canopy to cause the unnatural decline of the tree.

Endangered species means as listed by the U.S. Department of Interior Fish and Wildlife Service.

Environmentally sensitive area means unique uplands, wetlands, and any natural area that would be adversely impacted by development.

Essential services means services designed and operated to provide water, sewer, gas, telephone, electricity, television or communications to the general public by providers that have been approved and authorized according to laws having appropriate jurisdiction.

Exotic vegetation shall mean noxious plants as defined in Code section 18-32.

Family means one or more natural persons occupying a single dwelling unit, provided that, unless all members are related by law, blood, adoption, or marriage, no such family shall contain over four persons, but further provided that domestic servants employed on the premises may be housed on the premises without being counted as a separate or additional family or families. The term family shall not be construed to mean a fraternity, sorority, club, monastery or convent, or institutional group.

Family care facility means a residential facility designed to be occupied by not more than six persons under care, plus supervisors as required by F.A.C. 10A-5.019, and constituting a single dwelling unit (i.e., adult congregate living facility for: frail elders (as defined in F.S. § 400.618(9), as amended); developmentally disabled persons (as defined in F.S. § 393.063(10), as amended); physically disabled or handicapped persons (as defined in F.S. § 760.22(7)(a), as amended); mentally ill persons (as defined in F.S. § 394.455(18), as amended); and persons recovering from alcohol and/or drug abuse. Foster care facilities are also included, but not the uses listed under group care facility (category II). This use shall be applicable to single-family dwelling units and mobile homes.

Family care facilities in residential single-family districts shall not be made available to an individual: (1) whose tenancy would constitute a direct threat to the health or safety of other individuals; (2) whose tenancy would result in substantial physical damage to the property of others; or (3) who is engaged in the current, illegal use of or addiction to a controlled substance, as defined in Section 802 of Title 21, U.S. Code.

Family day care home means an occupied residence in which child care is regularly provided and for which a payment, fee, or grant is received for any of the children given care, whether or not the facility is operated for profit. A family day care home shall be allowed to provide care for one of the following groups of children:

(1) A family day care home may care for a maximum of five preschool children from more than one unrelated family and a maximum of five elementary school siblings of the preschoolers in care after school hours. The maximum number of five preschool children includes preschool children in the home and preschool children received for day care who are not related to the resident caregiver. The total number of children in the home may not exceed ten under this paragraph.

(2) When the home is licensed and provisions are made for substitute care, a family day care home may care for a maximum of five preschool children from more than one unrelated family, a maximum of three elementary school siblings of the preschool children receiving care after school hours and a maximum of two elementary school children unrelated to the preschool children in care after school hours. The maximum number of five preschool children includes preschool children in the home and preschool children received for day care who are not related to the resident caregiver. The total number of children in the home may not exceed ten children.

(3) When the home is licensed and provisions are made for substitute care, a family day care home may care for a maximum number of seven elementary school children from more than one unrelated family receiving care after school hours. Preschool children shall not be in care in the home. The total number of elementary school children in the home may not exceed seven under this paragraph.

The family day care home shall be a permitted activity within a residential district. Family day care homes shall be required to receive any required licensing or registration, as applicable by the department of health and rehabilitative services or any other state agency having the authority to regulate such homes.

Final development order means a final local development order or a final DRI development order.

Flags, noncommercial means any flags as otherwise defined by this code, displayed with the intent of conveying a literary, artistic, political, philosophical or religious message and not to advertise an establishment, or merchandise, services or entertainment provided by such establishment.

Floor area means the sum of the gross horizontal areas of the several floors of a building measured from the exterior faces of the exterior walls or from the centerline of common walls separating two buildings, excluding attic areas with a headroom of less than seven feet, enclosed or unenclosed stairs or fire escapes, elevator structures, cooling towers, areas devoted to air conditioning, ventilating or heating or other building machinery and equipment, parking structures, and crawl space where the ceiling is not more than an average of 48 inches above the general finished grade level of the adjacent portion of the lot, except as may be otherwise indicated in relation to particular districts and uses.

Floor area ratio (FAR) means a means of measurement of the intensity of building development on a site. A floor area ratio is the relationship between the gross floor area on a site and the gross land area. The FAR is calculated by adding together the gross floor areas of all buildings on the site and dividing that figure by the gross land area. For example, a floor area ratio of 1.0 means one square foot of building may be constructed for each square foot of lot area. The gross floor area of a building clearly designed for a parking facility shall not be included in the floor area ratio calculation.

Garage, parking means a building or portion thereof designed or used for temporary parking of motor vehicles, and within which gasoline and oils may be sold only to parking patrons of the garage.

Garage, private means an accessory structure designed or used for inside parking of private passenger vehicles, recreation vehicles, or boats, solely by the occupants of the main building. A private garage attached to or a part of the main structure is to be considered part of the main building. There can be no public shop or mechanical service in connection with a private garage.

Garage, storage means a building or portion thereof designed and used primarily for the storage of motor vehicles or boats, and within which temporary parking may also be permitted.

Government facilities means local, state and federally owned or leased and operated government facilities that provide government services, including primary civic or public institutional uses.

Group care facility means a type of facility, which provides a living environment for seven to 14 persons under care who operate as the functional equivalent of a family, including such supervision and care by supportive staff as may be necessary to meet the physical, emotional, and social needs of the residents.

(1) Category I means a group care facility designed to accommodate seven to 14 persons under care, plus resident supervisors as required by subsection 10A-5.019, F.A.C. (i.e., adult congregate living facilities for frail elders (as defined in F.S. § 400.618(9), as amended); developmentally disabled persons (as defined in F.S. § 393.063(10); physically disabled or handicapped persons, as defined in F.S. § 760.22(7)(a), as amended); mentally ill persons (as defined in F.S. § 394.455(18), as amended); and persons recovering from alcohol and/or drug abuse. Foster care facilities are also included.

(2) Category II means a group care facility designed to accommodate seven to 14 persons under care, plus resident supervisors as required by F.A.C. 10A-5.019. This type of facility offers a higher level of personal and therapeutic care than a category I facility (i.e., crisis and attention care, displaced adult care, homeless shelters, mental and emotional health care, offender halfway houses, spouse abuse care, substance abuse care, and youth shelters).

Category I group facilities in residential single-family districts shall not be made available to an individual: (1) whose tenancy would constitute a direct threat to the health or safety of other individuals; (2) whose tenancy would result in substantial physical damage to the property of others; or (3) who is engaged in

the current, illegal use of or addiction to a controlled substance, as defined in Section 802 of Title 21, U.S. Code.

Group housing means housing structures designed to meet the special needs (such as housing, health, and socialization) of certain segments of the population, such as youth, the elderly, or the developmentally disabled. Group housing refers to the following types of structures: family care facilities, group care facilities (category I and category II), care units, and nursing homes.

Group housing unit means a room or rooms connected together, constituting a separate, independent housekeeping establishment and physically separated from any other rooms or group housing units, which may be in the same structure, with or without complete kitchen facilities, and containing sleeping facilities and sanitary facilities. A group housing unit is applicable to the following types of structures: family care facilities, group care facilities (category I and category II), care units, and nursing homes and assisted living and continuing care facilities.

Guesthouse or cottage means an accessory dwelling unit which might or might not include cooking facilities, which is incorporated, attached to, or detached from a principal dwelling; and which is used exclusively for the noncommercial (nonrental) accommodation of friends or relatives of the occupant or owner of the principal dwelling. Guesthouses or cottages are not permitted in development that is receiving an AHDB.

Hatrack means to sever the leader or leaders, or to prune a tree by stubbing of mature wood.

Historical and archaeological survey and assessment means the historic/archaeological survey and assessment to be completed by a certified archaeologist.

Home for the aged means a facility for the care of the aged with routine nursing and/or medical care and supervision provided. A home for the aged is in the nature of a nursing home, but with clientele restricted to the aged.

Home occupation means an occupation conducted entirely in a dwelling unit in accordance with article III.

Horizontal condominium parcel means a condominium property, as defined in F.S. § 718.103(13), as amended.

Horizontal cooperative parcel means a cooperative property, as defined in F.S. § 719.103(15), as amended.

Hospital means a building or group of buildings having facilities for overnight care of one or more human patients, providing services to inpatients and medical care to the sick and injured, or medical centers which offer primary and urgent care treatment for all types of injuries and traumas, and which may include as related facilities laboratories, outpatient services, training facilities, central service facilities and staff facilities; provided, however, that any related facility shall be incidental and subordinate to principal hospital or medical center use and operation. A hospital is an institutional use under these zoning regulations.

Hotel means a facility offering transient lodging accommodations normally on a daily rate to the general public and typically providing accessory uses, such as: restaurants, meeting rooms and recreational facilities. Hotels are different from motels, in that each room does not have a separate entry directly from the outside of the building but rather entry is gained through the interior of the building through a lobby. For the purposes of calculating residential density each guestroom shall be considered a dwelling unit.

Hotel or motel unit means a hotel or motel unit is a unit designed for transient occupancy and utilized for rental purposes only. A hotel or motel unit may have cooking or eating facilities. A hotel or motel unit shall contain bathing and sanitary facilities.

Household means the same as family.

Jurisdictional waters means those surface waters and wetlands to their landward extent within the department of environmental protection's wetland resource jurisdiction, pursuant to Rule 17-312.030, F.A.C., and Rule 17-301.200 or 17-301.400, F.A.C.

Kenneling means an establishment licensed to operate a facility housing dogs, cats, or other household pets or the keeping of more than three dogs, six months or older, on premises used for residential purposes, or the keeping of more than two dogs on property used for industrial or commercial security purposes.

Land development regulations or land development code means ordinances enacted by city council pursuant to state statutes for the regulation of development, and includes any zoning, subdivision, impact fee, building construction, or sign regulations, or any other regulations controlling the development of land, and where appropriate, this code.

Landscape buffer means an area of land which is required to be set aside along the perimeter of a lot in which landscaping (existing, relocated or introduced) is used to provide a transition between, and to reduce the undesirable or incompatible impacts between differing land uses.

Landscaping, cultivated means any landscaping that is installed, planted, sown, improved by labor, etc., and that is not naturally occurring.

Level of service (LOS) means an indicator of the extent or degree of service provided by, or proposed to be provided by, a public facility based on and related to the operational characteristics of the public facility, as adopted in the comprehensive plan. LOS shall indicate the capacity per unit of demand for each public facility. (See article X, Concurrency Management.)

Listed or protected species means any plant or animal species that is currently listed as endangered, threatened or species of special concern on a state or federal government protected species list.

Loading space, off-street means a space logically and conveniently located for pickups and/or deliveries or for loading and/or unloading, scaled to delivery vehicles expected to be used and accessible to such vehicles when required off-street parking spaces are filled.

Lot, corner means a lot located at the intersection of two or more streets. A lot abutting a curved street or streets shall be considered a corner lot if straight lines drawn from the foremost points of the side lot lines to the foremost point of the lot meet at an interior angle of less than 135 degrees.

Lot, interior means a lot other than a corner lot, with only one frontage on a street.

Lot measurement, depth means depth of a lot is considered to be the distance between the midpoints of straight lines connecting the foremost points of the side lot lines in front and the rearmost points of the side lot lines in the rear.

Lot measurement, width means width of a lot shall be considered to be the average distance between straight lines connecting front and rear lot lines at each side of the lot, measured as straight lines between the foremost points of the side lot lines in front (where they intersect with the street line) and the rearmost points of the side lot lines in the rear, provided however, that the width between the side lines at their foremost points in the front shall not be less than 80 percent of the required lot width, except in the case of lots on the turning circle of a cul-de-sac when the 80 percent requirement shall not apply. The minimum lot width on a cul-de-sac shall be figured by drawing a straight line at the chord, then drawing a straight line parallel to it at the required setback line for that particular zoning district. That new established line shall meet the minimum lot width of that district.

Lot of record means (1) a lot which is part of a subdivision recorded in the public records of Collier County, Florida; or (2) a lot, parcel, or the least fractional unit of land or water under common ownership which has limited fixed boundaries, described by metes and bounds or other specific legal description, the description of which has been so recorded in the public records of Collier County, Florida, on or before the effective date of this land development code; or (3) a lot, parcel, or the least fractional unit of land or water under common ownership which has limited fixed boundaries, for which an agreement for deed was executed prior to October 14, 1974.

Lot, shoulder means a waterfront corner lot which straddles the waterway, has a property line which extends into the water and contains a seawall or bulkhead or shoreline which is indented from the property line thus creating a strip of land which is under water and is usually used for the docking of a boat.

Mangrove or mangrove trees shall be defined as any of the following species: red mangrove (Rhizophora mangle), black mangrove (Avicennia germinans) white mangrove (Laguncularia racemosa) and buttonwood (Conocarpus erectus).

Map of areas of historical/archaeological probability means mapping pursuant to the department of state, division of historical resources.

Marina means a boating facility, chiefly for recreational boating, located on navigable water frontage, and providing all or any combination of the following: boat slips or dockage, dry boat storage, small boat hauling or launching facilities, marine fuel and lubricants, marine supplies, bait and fishing equipment, restaurants, boat and boat motor sales, and rentals. Minor boat, rigging and motor repair which is incidental to the principal marina use is generally allowed as an accessory use. However, no dredge, barge or other work-dockage or service is permitted, and no boat construction or reconstruction is permitted. A boat sales lot is not a marina.

Mean high-water line means The intersection of the tidal plane of mean high water with the shore as established by the Florida Coastal Mapping Act of 1974, chapter 74-56, Laws of Florida (F.S. § 177.25 et seq.).

Mitigation means to compensate for negative impacts to tree(s) by purchasing a replacement tree or financially compensating the city.

Mixed use means a development/project consisting of commercial uses on the first floor, commercial and/or residential uses on the second floor, and residential uses on the third and remaining floors. All mixed-use projects shall have a residential component as part of the project. (See article VIII).

Model or model home means a structure used on a temporary basis exclusively for the demonstration and sale of dwellings or units within a development under construction. Models shall not be occupied as a dwelling unit and shall be governed by the requirements of a temporary use permit.

Model sales office means a structure used on a temporary basis for the demonstration and sale of dwellings or units which may or may not be within the development in which it is located. Model sales offices shall not be occupied as a dwelling unit. Commercial activities within the model sales office shall be restricted to sales, marketing, and administrative functions of the development in which it is located, or adjacent development under the same control.

Motel (motor hotel, motor lodge, tourist court) means a facility offering transient lodging accommodations normally on a daily basis and at a daily rate for automobile travelers and typically providing parking adjacent to each sleeping room. Accessory uses may be provided, such as: restaurants, meeting rooms and recreational facilities. Motels are different from hotels, in that each motel room has a separate entry directly from the outside of the building while hotel guests gain entry to their rooms through the interior of the building through a lobby. For the purposes of calculating residential density each guestroom shall be considered a dwelling unit.

Native vegetation means native Southern Floridian species as determined by accepted valid scientific references.

Navigable waterway means any salt or brackish body of water, whether natural or manmade, which is tidal in nature, and is wide enough, deep enough, or free enough from obstructions to be traveled on by vessels and is connected to another navigable waterway.

NGVD means National Geodetic Vertical Datum, 1929, as established by NOAA, which is adjusted and published from time to time. The most current adjustment shall apply with respect to this code.

Nightclub means a commercial eating or drinking establishment where a dance floor and music is provided. The term nightclub may include a bar, restaurant, cocktail lounge, cabaret, or similar establishment.

Nonconforming lot of record means any lawful lot or parcel which was recorded, or for which an agreement for deed was executed, prior to the effective date of this code, and which lot or parcel does not meet the minimum width or lot area requirements as a result of the passage of this code shall be considered as a legal nonconforming lot and shall be eligible for the issuance of a building permit provided all the other requirements of this code and the state statutes are met. This definition also includes any lot or parcel made nonconforming by a rezoning initiated by Collier County to implement the Zoning Reevaluation Ordinance [No.] 90-23 (1990).

Nuisance vegetation shall mean noxious plants as defined in Code section 18-32.

Nursing home, rest home or extended care facility. See assisted living facility (ALF).

Office means a building or portion of a building wherein services are performed involving predominantly administrative, professional or clerical operations. It is a characteristic that retail or wholesale goods are not shown to or delivered from the premises to customers or delivered from the premises to a customer.

Open space means unoccupied space which is not used for buildings or structures and which is open to the sky. On improved lots, open space is the area between and around structures, including recreation areas.

Open space, common means open space within or related to a development, not in individually owned lots or dedicated for public use, but which is designed and intended for the common use or enjoyment of the residents of the development.

Open space, usable means active or passive recreation areas such as playgrounds, golf courses, beach frontage, waterways, lagoons, floodplains, nature trails and other similar open spaces. Open space areas shall also include those areas set aside for preservation of native vegetation and landscape areas. Open water area beyond the perimeter of the site, street right-of-way except where dedicated or donated for public use, driveways, off-street parking areas, and off-street loading areas shall not be counted in determining usable open space.

Owner of record means the current title holder or owner as reflected on the current Collier County tax rolls.

Parking, stacked means the parking of motor vehicles in such a manner that parked vehicles may not have direct access to the public right-of-way or open and unobstructed internal access drives to and from the public right-of-way without moving one or more adjacent vehicles.

Person means an individual, corporation, governmental agency, business, estate, trust, partnership, firm, joint venture, syndicate, fiduciary, society, organization, association, two or more persons having a joint or common interest, or any other entity, and its designated agents, successors or assigns.

Plat means a map depicting the division or subdivision of land into lots, blocks, parcels, tracts, or other portions thereof, however the same may be designated, prepared in accordance with the provisions of this code and those of any applicable law, which shall be recorded.

Plat, final subdivision. Per article VII.

Plat of record: A plat which conforms to the requirements of the applicable laws of the state and the county, which has been accepted by city council and placed in the official records of Collier County.

Plat, preliminary subdivision. Per article VII.

Porch means a roofed-over space, with the roof impervious to weather, attached to the outside of an exterior wall of a building, which has no enclosure other than the exterior walls of such building. Open mesh screening with a roof impervious to weather shall not be considered an enclosure.

Preserve area means a parcel containing an archaeological site, or native habitat, either wetland or upland or threatened or endangered species, which shall be preserved in its natural state in perpetuity, with no alteration, save the removal of exotics.

Principal use means the primary use existing or permitted upon a parcel of land.

Private club. See club, private.

Private trees means trees located within the public right-of-way lying between property lines and paved streets within the city that have not been planted or adopted by the city for care and maintenance.

Property owners' association means an association or organization, whether or not incorporated, which operates under and pursuant to recorded covenants for maintenance and ownership agreements through which each owner of a portion of a subdivision, be it a lot, property or any other interest, is automatically a member as a condition of ownership, and each such member is subject to charge or assessment for a prorated share of expenses of the association which may become a lien against the lot, property or other interest of the member. As used within this code, the term "property owners' association" includes a "community association" as defined in F.S. § 468.431(1), as amended, as well as any other organization or association which would fall within the statutory definition of "community association" but for the fact that what the property operates or serves is not residential.

Pruning shall mean the cutting away, removal, cutting off or cutting back of parts of a tree.

Public facilities means capital drainage facilities, capital park facilities, capital potable water facilities, capital road facilities, capital sanitary sewer facilities, and capital solid waste facilities.

Public resource means land, air, water and wildlife which is part of the public domain or which is within the realm embracing inherent rights that belong to the community at large and in which the community shares the rights and benefits of such resources.

Public trees means street trees, median and cul-de-sac trees, park trees and other city owned trees located on city property that have been planted or adopted by the city for care and maintenance.

Public trees, street shall mean trees on rights-of-way lying between property lines and paved streets within the city that have been planted or adopted by the city for care and maintenance.

Public trees, median and cul-de-sac shall mean trees on public rights-of-way surrounded by paved streets within the city that have been planted or adopted by the city for care and maintenance.

Public trees, park shall mean trees located on land within public park boundaries owned by the city.

Public trees, other shall mean public trees not included in any other definition of public trees, but owned by the city on city property.

Record improvement plans means plans revised and corrected during or after project construction to display as-built conditions, revision or changes to the approved plans which occurred during the construction period, and all final constructed conditions, elevations, grades, slopes, and the like for the improvements constructed.

Recreational equipment means vehicles or equipment primarily designed as temporary living quarters for recreational, camping, or travel use, or used in the pursuit of other recreational activities such as boating or fishing, or vehicles or equipment designed or modified expressly for competition and operated primarily on a track or course. Said vehicles or equipment must be maintained in an operational condition.

Removal means to cut down, dig up, destroy, effectively destroy, or the unlicensed relocation of any tree.

Replatted parent parcel means the resubdivision of a recorded parcel of land through a replat, to divide the original platted parcel into multiple parcels of land.

Restaurant, fast food means an establishment where food is prepared and served to the customer in a ready-to-consume state for consumption either within the restaurant building, outside the building but on the same premises, or off the premises and having any combination of two or more of the following characteristics:

(1) A limited menu, usually posted on a sign rather than printed on individual sheets or booklets;

(2) Self-service rather than table service by restaurant employees;

(3) Disposable containers and utensils; or

(4) A kitchen area in excess of 50 percent of the total floor area;

(5) A cafeteria or delicatessen shall not be deemed a fast food restaurant for the purpose of this land development code.

Restaurant, sit-down means a restaurant where food is ordered from a menu normally while seated at a table, and where table service is provided. Cafeterias are deemed sit-down restaurants for the purpose of this land development code.

Restaurant, walk-up means a fast food facility with one or more walk-up windows. This type of facility has no indoor seating or drive-through windows, but may have outdoor seating.

Right-of-way means a strip of land, public or private, occupied or intended to be occupied by a street, crosswalk, railroad, electric transmission line, oil or gas pipeline, storm drainageway, water main, sanitary or storm sewer main, or for similar special use. The usage of the term "right-of-way" for land platting purposes shall mean that every right-of-way, whether public or private, hereafter established and shown on a plat is to be separate and distinct from the lots or parcels adjoining such right-of-way and not included within the dimensions or areas of such lots or parcels.

Riparian line. See chapter 54, article IV.

Screening means method by which a view of one site from another adjacent site is shielded, concealed, or hidden. Screening techniques include fences, walls, berms, landscaping or a combination.

Sea turtle means any adult, juvenile, or egg of any species of reptile belonging to the genera Caretta, Chelonia, Dertinochelys, Lepidochelys, and Eretmochelys.

Sea turtle (flagging) means the clear delineation of a sea turtle nest by placing three or more stakes in the ground around, but not in, the nest and connecting the stakes with colored surveyor flagging tape.

Sea turtle (nesting season) means the sea turtle nesting period between May 1 and October 31.

Sea turtle (nesting zone) means the region extending from the mean high-tide mark to 100 feet landward of the beginning of the dune vegetation line. For beaches without dune vegetation, the nesting zone will extend 300 feet landward of mean high tide.

Seagrass or seagrass bed means any intertidal or submerged estuarine or marine habitat that is or could expected to be at least 20 percent covered during the growing season by any combination of the following plants: turtle grass (Thalassia testudinum), manatee grass (Syringodium filiforme), shoal grass (Halodule wrightii), widgeon grass (Ruppia maritima), and any species of Halophila.

Servants' quarters means dwelling units located in residential districts and utilized for domestic servants employed on the premises. Such units may be in either a principal or an accessory building, but no such living quarters shall be rented, leased, or otherwise be made available for compensation of any kind except in the form of housing for servants.

Setback line means a line marking the minimum open space distance between a right-of-way line, property line, bulkhead line, shoreline, seawall, mean high water mark, access easement line or other defined location whichever is the most restrictive, and the beginning point of a required yard or the buildable area, as this land development code may require in the particular case. Setback lines may be measured from the legal boundary of a lot and are inclusive of easements with the exception of easements that comprise a road right-of-way.

Shopping center means a group of unified commercial establishments built on a site which is planned, developed, owned or managed as an operating unit and related in its location, size, and type of shops to the trade area that the unit serves. It consists of eight or more retail business or service establishments containing a minimum total of 16,000 square feet of floor area. No more than 20 percent of a shopping center's floor area can be composed of restaurants without providing additional parking for the area over 20 percent. A marina, hotel, or motel with accessory retail shops is not considered a shopping center.

Shoreline means on tidal waters, that line between water and upland area which follows the general configuration of the mean high-water line. On nontidal waters, the shoreline is determined by the annual average water level or water management system control elevation. Boat slips and other manmade or minor indentations are construed as lying landward of the shoreline and are construed as upland when computing the lot area of the waterfront property.

Sidewalk means that portion of a right-of-way or cross-walkway, paved or otherwise surfaced, intended for pedestrian use and also bicycle use, if properly sized.

Sign, public service means any sign intended to promote primarily a public purpose including items of general interest to the community welfare. It may also refer to a sign designed to render a public service such as, but not limited to, time and temperature signs.

Site alteration means any modification, change, or transformation of any portion of a lot or parcel of land including, but not limited to, the removal, displacement or relocation of trees, plants and vegetation, the addition, disturbance, or removal of earth materials; the creation, retention, or relocation of drainage courses or water areas.

Site development plan means A graphic representation, together with supportive information and data, that clearly depicts the proposed project on a particular lot or parcel of land. A site development plan is further defined for the purpose of this section as including the preliminary (when required) and final SDP.

Site preparation means any clearing and grading, excavation and vegetation removal activity for which a permit is required.

Special treatment zoning means overlay district providing for special regulations for areas of environmental sensitivity, and lands and structures of historical and/or archaeological significance.

Storage facility, self-service means a building or group of buildings in a controlled access and fenced compound that contains varying sizes of individual, compartmentalized, and controlled access stalls or lockers for the storage of customer's goods or wares.

Street means a public or approved private thoroughfare, including the right-of-way, which affords the principal means of access to abutting property. Street includes lanes, ways, places, drives, boulevards, roads, avenues, or other means of access, regardless of the descriptive term used, except alleys.

Street, arterial means a street that provides a high degree of mobility and serves long trips. High operating speeds and levels of service are provided. Access management is used to preserve capacity. Arterials connect major developments such as central business districts, large urban commercial centers, large industrial centers, major residential communities and other major activity centers within the urbanized area. Desirable operating speed should be at least 40 to 45 miles per hour.

Street frontage means that portion of the lot which borders on the street; corner lots have two frontages.

Street, local means a street that provides land access and can be local (public or private) residential streets, local downtown streets, and local commercial/industrial streets. Locals involve traveling to and from a collector facility. Trip lengths are short, volumes are low and speeds are low. Average daily trip generation rate ranges from zero to 2,000 vehicle trips per day.

Street, major collector means a street that provides land access and public or private movement within residential, commercial and industrial areas. Major collectors penetrate and may have continuity within residential areas. Operating speed and volumes are in excess of residential standards, 30 mph. Average daily trip generation rate exceeds 4,000 vehicle trips per day. Residential driveway connections are prohibited.

Street, marginal access means a street which is parallel and adjacent to an expressway, arterial street or limited access street or in the immediate vicinity of such streets from [for] local service of abutting property by providing protection from conflicts with through traffic. A marginal access street may also be called a frontage street.

Street, minor collector means a street that provides land access and public or private movement within residential, commercial and industrial areas. Minor collectors penetrate, but should not have continuity through residential areas. Operating speeds and volumes are low. Average daily trip generation rate ranges from 2,000 to 4,000 vehicle trips per day.

Street, private means any authorized street that has not been dedicated for public use and not accepted for ownership or maintenance by the city council.

Street, public means any street designated to serve more than one property owner, which must be dedicated to the public and be accepted by city council.

Structure means anything constructed or erected which requires a fixed location on the ground, or in the ground, or attached to something having a fixed location on or in the ground, including buildings, towers, smokestacks, utility poles, and overhead transmission lines. Fences, gates or posts are not intended to be structures.

Subdivide means the act or process of creating a subdivision; the act or process of dividing land if the extension of an existing street or the establishment of a new street is involved; the act or process or resubdividing, or developing residential or nonresidential zoned land, whether by deed, metes and bounds description, devise, inheritance, map, plat or other recorded instrument.

Subdivision. See article VII.

Substantial improvement means any repair, reconstruction, or improvement of a sign, the estimated cost of which equals or exceeds 50 percent of the market value of current replacement cost of the sign, whichever is lower, either [sic] before the improvement.

Surface water management system means the collection of facilities, improvements, or natural systems whereby surface waters are collected, controlled, conveyed, impounded, or obstructed. The term includes stormwater management systems, dams, impoundments, reservoirs, appurtenant works, and works as defined in F.S. § 373.403(1)—(5).

Surface waters means those which have been precipitated on the land or forced to the surface in springs, and which have then spread over the surface of the ground. They appear as puddles, sheet or overland flow, rills, streams and lakes, and continue to be surface waters until they disappear by infiltration, evaporation, or discharge into the sea.

Temporary use means a prospective use intended for a limited duration. Temporary uses require a permit pursuant to the conditions set forth in code and may include the placement of signage, merchandise, temporary structures and equipment.

Threatened species means those species listed by the U.S. Fish and Wildlife Service.

Timeshare estate means any interest in a dwelling unit under which the exclusive right of use, ownership, possession, or occupancy of the unit circulates among the various owners of timeshare estates in such unit in accordance with a fixed time schedule on a periodically recurring basis for a period of time established by such schedule.

Timeshare estate facility means any dwelling in which timeshare estates have been created.

Timeshare unit means a dwelling unit in which timeshare estates have been created.

Topping means the severe cutting back of limbs within the tree's crown to such a degree where the normal canopy is removed and the tree disfigured.

Trailer, boat means a wheeled conveyance drawn by other motive power for the transportation of a single boat.

Trailer, travel means a vehicular, portable structure built on a chassis, designed to be used as a temporary dwelling for travel, recreational and vacation purposes, which: (1) is identified by the manufacturer as a travel trailer; (2) does not exceed 480 square feet in gross floor area.

Tree means any living, self-supporting, woody perennial plant which has a DBH of no less than three inches and which normally grows to an overall height of no less than ten feet in Southwest Florida.

Tree abuse means to do any of the following to a publicly owned tree:

(1) Hatracking or topping a tree;

(2) Destroying the natural habit of tree growth;

(3) Pruning which leaves stubs or results in a flush cut or splitting of limb ends;

(4) Removing tree bark to the extent that if a line is drawn at any height around the circumference of the tree, over one-third of the length of the line falls on portions of the tree where bark no longer remains;

(5) Using climbing spikes, nails or hooks, except for purposes of total tree removal or as specifically permitted by standards set by the American National Standards Institute, and/or the International Society of Arboriculture, as amended;

(6) Pruning that does not conform to standards or recommendations set by the American National Standards Institute, as amended;

(7) Pruning of live palm fronds which initiate above the horizontal plane;

(8) Over lifting a tree; or

(9) Shaping a tree.

Tree fund means a city account dedicated to the purchase and planting of trees and irrigation in city parks, rights-of-way, medians, public open spaces and other facilities.

Use means the purpose of [for] which land or water or a structure thereon is designated, arranged, designed or intended to be occupied or utilized or for which it is occupied or maintained. The use of land or water in the various zoning districts is governed by this land development code.

Variance means a relaxation of the terms of this land development code where such variance will not be contrary to the public interest and where, owing to conditions peculiar to the property and not the result of the actions of the applicant, a literal enforcement of this land development code would result in unnecessary and undue hardship on the land. A variance is authorized only for height, area, and size of structure or size of yards and open spaces, landscaping, signs, architectural features, and off-street vehicular facilities and parking. Establishment or expansion of a use otherwise prohibited or not permitted shall not be allowed by variance nor shall a variance be granted because of the presence of nonconformities in the land use district or classification.

Vehicle means, for the purposes of this code, shall include but not be limited to any truck, bulldozer, tractor, automobile, motorcycle, dune or swamp buggy, motorbike, go-cart, van or trailer of any type, horse-drawn cart or wagon, travel or camping trailer, coach mobile home or any other vehicles of conveyance which are motorized or, if not motorized, which weigh in excess of 150 pounds.

Vehicular access easement. See article VII.

Vehicular use area means either an area designed or used for off-street parking or an area used for loading, circulation, access, storage, display, or traverse of property by vehicles, boats or construction equipment.

Viable wetland means a wetland system that provides or has a reasonable probability to provide functions (roles or values) relating to environmental quality, fish and wildlife and/or socioeconomic values.

Warehouse means a building or substantial portion of a building where goods, merchandise, products, supplies, or equipment are stored before distribution to manufacturers, retailers, or wholesalers.

Water management plan, master means generalized but comprehensive engineering drawings, design computations, and written reports outlining the primary and secondary drainage facilities needed for proper development.

Water quality standards means standards comprised of designated most beneficial uses (classification of waters), the numerical and narrative criteria applied to the specific water use or

classification, the state antidegradation policy, and the moderating provisions contained in F.A.C. chs. 17-3 and 17-4.

Waterfront means property where any or all of its lot lines abut on or are contiguous to any body of water at its normal level, including creek, canal, bay, gulf and river, natural or artificial, not including a swimming pool, where water is present, year-round under normal conditions.

Yard means the required open space, unoccupied and obstructed by any structure or portion of a structure from 30 inches above the general ground level of the graded lot upward, provided, however, that fences and walls may be permitted in any yard subject to height limitations indicated herein.

Yard, front means the required open space extending across the entire width of the lot between the front building line and street right-of-way line. Where double-frontage lots exist, the required front yard shall be provided on both streets except as otherwise provided for herein.

Where corner lots of record existed prior to August 27, 1997 which do not meet minimum lot width or area requirements established in this code: (1) only one full depth front yard shall be required, (2) all other front yards shall be not less than 50 percent of the otherwise required front yard depth exclusive of any right-of-way, and the full depth front yard shall be located along the shorter lot line along the street.

In the case of shoulder lots which conform to the minimum lot width and area requirements of the zoning district, the required front yard adjacent to the longest street may be reduced by five feet providing that in no case may this yard be less than 25 feet.

In the case of through lots, unless the prevailing front yard pattern on the adjoining lots indicates otherwise, a full depth front yard shall be provided on all frontages. Where one of the front yards that would normally be required on a through lot is not in keeping with the prevailing yard pattern, the development services director may waive the requirement for the normal front yard and substitute therefore a special yard requirement which shall not exceed the average of the yards provided on adjacent lots.

Depth of a required front yard shall be measured so that the yard established is a strip of the minimum width required by the district regulations with its inner edge parallel to the front lot line. In the case of irregularly shaped lots, including cul-de-sac, the depth may be measured at right angles to a straight line joining the foremost points of the side lot line, provided the depth at any point along the property line is never less than 18 feet.

Yard, rear means the required open space extending across the entire width of the rear yard between the inside lines of the side yards and except in corner lots is generally that lot line most opposite the right-of-way line.

When dealing with irregularly shaped lots where a typical rear lot line cannot readily be defined, the community development director will determine the rear lot line for the purposes of establishing yard requirements.

In the case of through lots and corner lots, there will be no rear yards, but only front and side yards. Depth of a required rear yard shall be measured so that the yard established is a strip of the minimum width required by zoning district regulations with its inner edge parallel to the rear lot line.

Yard, side means the required open space extending along each side lot line between the rear lines of the required front yard and the rear lot line, or in the absence of any clearly defined rear lot line, to the point on the lot farthest from the rear line of the front yard.

In the case of through lots, side yards shall extend from the rear lines of required front yards. In the case of corner lots, yards remaining after front yards have been established on both frontages shall be considered side yards.

Yard, special means a yard other than one adjacent to a public right-of-way performing the same functions as a side or rear yard, but so placed or oriented that neither the term "side yard" nor the term

"rear yard" clearly applies. The site review development director, or his designee, shall determine which lot line is front, side or rear for purposes of determining yard requirements.

Yard, waterfront means the required open space extending along the entire waterfront property with depth measured from property line, bulkhead, shoreline, seawall, mean high water mark, access easement, whichever is the most restrictive. Waterfront property is hereby defined as property abutting on the Gulf of Mexico, bays, bayous, navigable streams, and on man-created canals, lakes, or impounded reservoirs. For the purpose of this section, the minimum setback for any principal or accessory structure adjacent to the water shall be the same as the setback specified for the side or rear yard, as the case may be, in the particular zoning district. However, these setbacks shall never be less than ten feet for any structure unless specifically provided for in the land development code.

(Ord. No. 02-35, §§ 1—3, 12-2-2002; Ord. No. 09-14, § 3, 10-19-2009)

Secs. 30-11—30-60. - Reserved.

ARTICLE III. - HOME OCCUPATIONS

FOOTNOTE(S):

--- (2) ---

Note—See the editor's note to ch. 30

Sec. 30-401. - Definitions.

The following words, terms and phrases, when used in this article, shall have the meanings ascribed to them in this section, except where the context clearly indicates a different meaning:

Apparent commercial use means a commercial use which can be detected by a reasonable person through the sight, sound, vibration, glare, fumes, odor, dust, smoke or electromagnetic disturbances of such commercial use at any property line of such use.

Family shall have the same definition as provided in division 6.3 of county Ordinance No. 91-102, the county land development code in effect on August 28, 1997, which is the land development code for the city.

Home occupation means an accessory use of a dwelling unit for employment with no apparent commercial use which:

(1) Is clearly compatible and subordinate to the use of the dwelling unit as a residence;

(2) Does not alter the exterior of the dwelling unit or adversely affect the residential character of the neighborhood; and

(3) Is created and operated for the economic benefit of the residents of the dwelling unit.

Permanent resident means a person who has established a particular place where that person has his true, fixed, and permanent home and principal establishment to which, whenever absent, he has the intention of returning.

(Ord. No. 99-17, § 2, 8-16-1999)

Cross reference— Definitions generally, § 1-2

Sec. 30-402. - Penalties.

(a) Pursuant to F.S. § 162.22, a person found to be in violation of this article may be charged with a fine, not to exceed $500.00, and may be sentenced to a definite term of imprisonment, not to exceed 60 days. Each violation or noncompliance shall be considered a separate and distinct offense. Further, each day of continued violation or noncompliance shall be considered as a separate offense.

(b) Violation of this article may also be prosecuted before the code enforcement board.

(Ord. No. 99-17, § 8, 8-16-1999)

Sec. 30-403. - Intent and purpose of article.

It is the intent and purpose of this article to protect and promote the health, safety and welfare of the citizens of the city, and to minimize or negate adverse impacts of commercial activities in residential neighborhoods, by providing reasonable standards and conditions for the permitting and operation of home occupations. Further, it is the intent of this article that, in all zoning districts that allow residential dwellings as a permitted use, home occupations shall be allowed provided there is no apparent commercial use of the residentially zoned property and all the conditions contained in this article are met. It is further intended that this article shall be liberally construed to effect such intent and purpose.

(Ord. No. 99-17, § 1, 8-16-1999)

Sec. 30-404. - Permitted and prohibited uses; exemptions.

(a) A home occupation shall be permitted as an accessory use in all residential zoning districts; provided, however, the following uses are expressly prohibited as home occupations:

    (1) Personal service salon: barber, beautician, manicurist, pedicurist.

    (2) Engine (gasoline or diesel) repair shop, regardless of horsepower of engine.

    (3) Charter boats, excursion boats.

    (4) Motor vehicle and marine towing operations.

    (5) Clinic: medical, dental, veterinary, therapy.

(b) Any use and/or occupation for which an exemption from local regulation exists by either state or federal law shall be exempt for the provisions of this article.

(c) A person providing consulting or clerical support who is not a permanent resident of the dwelling unit may be employed at the home occupation.

(Ord. No. 99-17, § 3, 8-16-1999)

Sec. 30-405. - Conditions.

A home occupation shall be permitted and allowed to operate subject to adherence with the following conditions:

(1) Other than the business owner and his family, there shall be no person working at the residence of the home occupation that is not a permanent resident of the dwelling unit in which the home occupation is located. (See the exception in this article for consultant/clerical support.)

(2) Written consent of the property owner or the property owner's authorized agent is required.

(3) There shall be no advertising signage on-site or on areas contiguous to the property. Any print advertising or lawful off-site signage shall not reference the street address of the home occupation.

(4) Occasional (not to exceed ten trips per week) travel to and from the residence by customers or clients of the home occupation is permitted; continuous, regular or daily travel is prohibited. Vehicles owned by customers or clients of the home occupation may be parked on a limited basis provided that the vehicles are properly parked on an improved parking surface (e.g., driveway). Parking of vehicles in the public right-of-way (swales) is prohibited. Further, utilization of the residence as a place where employees or customers of the home occupation meet regularly or daily for travel to some other destination, and any parking of vehicles associated with this activity, are prohibited.

(5) The occasional (not to exceed two deliveries per week) receiving of goods or materials related to the service provided by the home occupation other than normal delivery by the U.S. Postal Service or similar carrier (e.g., UPS, Federal Express) is permitted.

(6) The parking or storage of commercial vehicles is prohibited by section 2.6.7.3 of the county land development code. Additionally, the parking or storage of vehicles or vessels for hire, or vehicles used exclusively for storage, is prohibited.

(7) The home occupation shall not create noise, vibration, glare, fumes, odor, dust, smoke or electromagnetic disturbances discernable by a reasonable person situated at the property line of the subject property. No equipment or processes shall be used which create visual or audible interference in any radio or television receiver. No chemicals or chemical equipment shall be used except those that are used for domestic or household purposes.

(8) There shall be no retail sale resulting in the exchange of materials, goods or products between owners and customers from the premises.

(9) There shall be no outside storage or display of goods, equipment or products.

(10) All home occupations shall be conducted entirely within the principal residential dwelling unit/structure. No home occupation shall be conducted in any accessory building or structure not attached to or a part of the principal residential structure, or any part of the principal structure that is not fully enclosed (e.g., a screened porch, open garage or carport).

(Ord. No. 99-17, § 4, 8-16-1999)

Sec. 30-406. - Notice to discontinue use.

A home occupation that is found to have violated any provision of this article shall be discontinued upon receipt of notice by the owner, owner's authorized agent, or occupant from the community development director or designee. Failure to comply with such notice shall constitute a violation of this article, and each day the use continues shall be considered a separate offense.

(Ord. No. 99-17, § 5, 8-16-1999)

Sec. 30-407. - Compliance with business and zoning regulations.

All home occupations shall be subject to all applicable occupational licenses and other business taxes. Further, all home occupations must obtain a letter of zoning compliance annually from the city.

(Ord. No. 99-17, § 6, 8-16-1999)

Secs. 30-408—30-430. - Reserved.

ARTICLE IV. - LANDSCAPING

Sec. 30-431. - Title and citation.

This article shall be known and may be cited as the "City of Marco Island Landscape Code."

(Ord. No. 02-22, § 1, 7-15-2002)

Sec. 30-432. - Intent and purpose.

The purpose and intent of the landscape code is to:

(1) Promote the health, safety, and welfare of residents of the city by establishing minimum uniform standards for the installation and maintenance of landscaping;

(2) Improve the aesthetic appearance of commercial, and residential developments through the requirement of minimum landscaping in ways that harmonize the natural and built environment; promote preservation and planting of native plants and plant communities;

(3) Improve environmental quality by reducing and reversing air, noise, heat, and chemical pollution through the preservation of canopy trees and the creation of shade and microclimate;

(4) Reduce heat gain in or on buildings or paved areas through the filtering capacity of trees and vegetation; and

(5) Promote water conservation by encouraging the use of native and drought-tolerant vegetation and properly zoned irrigation system through xeriscape.

(Ord. No. 02-22, § 2, 7-15-2002)

Sec. 30-433. - Landscaping and irrigation plan procedures.

Landscape plan required. Prior to the issuance of any subdivision plat or site development plan, an applicant whose development is covered by the requirements of this code shall submit a complete landscape plan to the community development director or his designee. This includes commercial, institutional, and multifamily developments. The landscape plan shall be prepared by and bear the seal of a registered landscape architect.

(1) Prior to the issuance of a certificate of occupancy for a single-family residence, the owner or owners' representative shall prepare and submit a copy of the final "as-built" survey that accurately depicts the approximate location of code-required landscaping materials on the property, including the common name of tree species installed, and the height at the time of planting. This landscape plan will be used in conjunction with the final inspection of the single-family residence, and kept as part of the permanent file.

Except in the case of a single-family residence, as described above, the landscape plan shall be drawn to a suitable scale, include dimensions, north arrow, date, title, project owner's name and address, delineate the existing and proposed parking, vehicular use areas, buildings, access points and roadways, show all utility lines or easements, and show the location of existing and proposed planting areas and vegetation communities and designate them by species name. The code-required landscaping shall be highlighted or indicated on the plan to differentiate from the applicant's provided landscaping that is in addition to that required by this code. Design creativity is encouraged so long as it meets the intent of this code. The plan shall show the location of permanent vegetation protection devices, such as barricades, curbing, and tree

wells. The plan shall also include a chart indicating graphic plant symbol, botanical and common name, quantity, height, spread, spacing, native status, drought tolerance rating (as defined by "Florida Friendly Landscaping", as may be amended from time to time, published by Florida Department of Environmental Protection and University of Florida, Florida-Friendly Landscape Guidance Models for Ordinances, Covenants, and Restrictions) and type of industry practices and standards. In addition, a tabulation of the code-required landscaping indicating the calculations necessary to ensure compliance with this code should also appear. A certificate of occupancy permit shall not be issued until approval of the landscaping plan and installation of plants are inspected by the city.

(2) Irrigation plan required. All new single-family residences, multifamily, commercial and institutional developments shall be irrigated by the use of an automatic irrigation system with controller set to apply water in a manner consistent with this code. Irrigation plans for multifamily, commercial and institutional developments shall be prepared by persons qualified to prepare irrigation plans, such as an irrigation designer or landscape architect. Moisture detection devices shall be installed with all automatic sprinkler systems to override the sprinkler activation mechanism during periods of increased rainfall. Where existing irrigation systems are modified requiring the acquisition of a permit, automatic activation systems and overriding moisture detection devices shall be installed in compliance with this code.

Required irrigation installed at single-family residences does not require the submittal of an irrigation plan. The system must be installed by a licensed professional prior to the issuance of a certificate of occupancy. As part of the final inspections for the residence, the irrigation system will be inspected to ensure the inclusion of the following system elements: control valve; vacuum breaker; timer (clock); and rain sensor.

a. The irrigation plan shall be drawn at the same scale as the landscape plan to: show existing vegetation to remain; delineate existing and proposed buildings and other site improvements, parking spaces, aisles, and driveways; indicate main valve, and pump locations, pipe sizes and specifications; show controller locations and specifications; show backflow preventer and rain-sensing devices and include a sprinkler-zoning plan indication type, specifications, spacing, and coverage. If drip irrigation or soaker hoses are proposed, their layout shall be shown.

b. Reference the city public right-of-way ordinance for irrigation system requirements within the public right-of-way. (Reserved.)

(3) Existing plant communities. Existing plant communities and ecosystems shall be maintained in a natural state and shall not be required to be irrigated. Native plant areas that are supplements to an existing plant community or newly installed by the applicant shall be irrigated on a temporary basis only during the period of establishment from a temporary irrigation system, water truck, or by hand watering with a hose.

(4) Cultivated landscapes. Cultivated landscape areas (sod, shrubs, and trees) shall be provided with an automatic irrigation system to improve the survivability of the required landscaping. Sprinkler heads irrigating lawns or other high water demand areas shall be zoned separately from those irrigating trees, shrubbery, groundcover, flowers, or other reduced water requirement areas. Automatically controlled irrigation systems shall be operated by an irrigation controller that is capable of watering "high water" requirement areas at different frequencies and duration than "low water requirement areas". Landscaping shall only be watered on as-needed basis.

(5) Irrigation systems. Irrigation systems shall be designed for the zoning of high and low water use areas. Plans shall include in schedule form, the irrigation system's total gallons per minute (GPM) for each zone, recommended zone running times in minutes, hours and showing days per week, and estimated zone precipitation rate in inches per hour. The irrigation system shall be generally designed to apply one inch of water per week during two operations per week. The system coverage shall be designed for 100 percent coverage unless specified by the designer. The system shall be generally designed for the 100 percent head-to-head coverage as

generally recommended by the irrigation sprinkler manufacturers for matched precipitation. These requirements may be adjusted for retention areas. The irrigation system shall be designed and installed in accordance with the Florida Irrigation Society's, Standards and Specifications for Turf and Landscape Irrigation Systems (as amended). Irrigation systems utilizing well water shall be designed and maintained in a manner which eliminates staining of the building, walks, walls, and other site improvements. All systems shall be designed to minimize the application of water onto sidewalks, driveways, streets, and other impervious areas. Irrigation systems, other than drip or soaker hose systems, shall be operated between the hours of midnight and 8:00 a.m. South Florida Water Management District (SFWMD), the city, or other utility company water use restrictions shall supersede these requirements. There are no operational requirements for irrigation systems utilizing effluent/reused water sources.

(6) Installation. Prior to the issuance of any certificate of occupancy permit for a use required to provide landscaping and irrigation in accordance with this section, all required landscaping and irrigation shall be installed and in place as set out in this code. All plant materials must be installed in accordance with accepted landscape practices in the area and meet the plant material standards contained in this code. Plant materials shall be installed in soil conditions that are conducive to the proper growth and the plant material.

(Ord. No. 02-22, § 3, 7-15-2002; Ord. No. 11-07, § 2, 6-20-2011)

Sec. 30-434. - Pruning, maintenance, and removal.

(a) Pruning. Vegetation required by this Code shall be pruned by property owners to promote healthy, uniform, natural growth of the vegetation. Pruning shall be performed in accordance with the current edition of pruning standards published by the American National Standard Institute (ANSI) A300 Pruning Standards, ANSI Z133.1 Safety Standards. Trees shall not be severely pruned in a manner that would damage the vegetation and permanently restrict growth or height. Severely pruned trees are considered damaged and a public nuisance, which shall be replaced with trees equal to the number and height of the damaged trees. A plant's growth habit shall be considered to determine the extent of pruning necessary to maintain healthy growth.

(1) Utility pruning. Utilities shall conform to current ANSI A-300 standards when performing line clearing work within public right-of-way. All utilities shall notify the city manager or designee by electronic communication or mail no later than 30 business days prior to performing any utility line clearing work within public right-of-ways. Franchised utilities, after notifying the city manager or designee, shall meet with the city manager or designee to review and approve plans and schedules for utility line clearing work. Franchised utilities shall have an ISA certified arborist directing the pruning of public and private trees. Utility pruning should only provide minimum safe clearance to protect energized power lines with consideration for the combined movement of the conductors near trees in severe weather, the species of the tree, and the voltage of the conductor.

(2) Canopy and root pruning. When activities affect public or private trees so that more than 50 percent of the area within the dripline is disturbed, or when pruning must be performed on the crown of a public or private tree, the following arboricultural techniques are required:

a. When the area within the dripline will be disturbed, the affected roots must be severed by clean pruning cuts where the activity impacts the roots. Roots may be pruned by utilizing trenching equipment that is specifically designed for this purpose or by hand digging a trench and pruning roots with a chain saw, pruning saw or other equipment designed for tree pruning. Roots within the dripline shall be pruned to a depth of 12 inches below existing grade or to the depth of the disturbance if less than 12 inches from the existing grade. When underground utilities are to be installed through the dripline, root pruning requirements may be waived by the city manager or designee if the lines are installed via tunneling or directional boring.

b. All pruning of public or private trees shall conform to the current ANSI standards defined herein and shall be supervised by an ISA certified arborist. There shall be no flush cuts, stub cuts, or lion's tailing of the crown of the tree.

c. It shall be a violation of this section to perform the techniques of topping, hatracking or other pruning techniques that remove the vertical leader stems or other pruning which results in an unnecessary reduction of shade of public or private trees.

(b) Maintenance. The owner shall be responsible for the continued maintenance and upkeep of all required landscaping so as to present a healthy plant in a condition representative of the species. Tree and palm staking shall be removed between six and 12 months after installation. All landscapes shall be kept free of refuse, debris, disease, pests, and weeds and shall be fertilized and irrigated to maintain plants in a healthy condition. Special maintenance requirements necessary to preserve the design professional's intent shall be noted on the planting plan.

(1) Care and maintenance of permitted private trees on city owned property. The care and maintenance of all private trees permitted on city owned property shall be the responsibility of the adjacent property owner. A permit shall be obtained from the city manager or designee prior to planting a private tree in the public right-of-way or on other city property. Property owners shall adhere to the maintenance and pruning standards contained herein when maintaining privately-owned trees on city property. Property owners must apply for a vegetation removal permit from the city manager or designee in accordance with Code article XIV and a permit to replace any private tree in the right-of-way in accordance with Code section 30-435

(2) Care and maintenance of public trees on city owned property. The city manager shall designate a department to be responsible for the care and maintenance of public trees on city owned property. Public trees are city street trees, median trees and cul-de-sac trees as defined in section 30-10. The department shall adhere to the maintenance and pruning standards contained herein when maintaining public trees on city property. The department director shall make reports and requests for funds for the care and maintenance of public trees, including needed planting and replanting, to the city council as part of the annual budget approval process. Before removing any public tree from the right-of-way, the department director shall notify the city manager and any other affected department directors.

(3) Private care and maintenance of public trees on city owned property. Private property owners may make a written request to the city manager or designee for permission to care for and maintain public trees on public property. Property owners shall adhere to the maintenance and pruning standards contained herein when maintaining publically owned trees on city property. Before replanting, removal or replacement of any public tree, a private property owner shall obtain the permission of the city manager or designee to plant the tree, shrub or other vegetation and if necessary apply for a vegetation removal permit from the city manager or designee in accordance with article XIV. If the replanting shall be in the right-of-way, the property owner shall obtain a permit from the city manager or designee in accordance with section 42-76. Fees for a permit for vegetation removal or replanting shall be waived for public trees.

(c) Removal of damaged or nuisance trees. Ongoing maintenance to prohibit the establishment of prohibited exotic species is required. Any plant materials of whatsoever type or kind required by these regulations shall be replaced within 30 days of their demise and/or removal.

(d) Compliance. Code compliance will inspect areas affected by this code and issue citations for violations. If the required corrective action is not taken within the time allowed, the city may use any available means of enforcement to secure compliance including, but not limited to:

(1) Prosecution before the city code enforcement board;

(2) Withholding of any permit, construction plan approval, certificate of occupancy, or inspection by the city; and

(3) Placing a lien on the property, to include all administrative, legal, material and installation costs.

(Ord. No. 02-22, § 4, 7-15-2002; Ord. No. 09-14, § 4, 10-19-2009; Ord. No. 11-07, § 2, 6-20-2011)

Sec. 30-435. - Plant material and installation standards.

(a) Quality. Plant materials used to meet the requirements of this section shall meet the standards for Florida No. 1 or better, as set out in Grades and Standards for Nursery Plants, part I and part II, Department of Agriculture, State of Florida (as amended). Root ball sizes on all transplanted plant materials shall also meet state standards.

(1) At least 50 percent of the trees and 50 percent of the shrubs used to fulfill these requirements shall be native or naturalized Southern Floridian species, as determined by accepted valid scientific reference. The "Recommended Trees and Shrubs for the City of Marco Island List" is available for reference at city hall.

(2) In addition, for all sites, at least 50 percent of the trees and shrubs used to fulfill these requirements shall be drought-tolerant species as listed in the South Florida Water Management District's Plants for Your Florida-Friendly Landscape. Reference to be used in the native determination may include, but not be limited to:

Long, R.W., and O. Lakela, 1976. A Flora of Tropical Florida. Small, J.K., 1933. A Manual of the Southeastern Flora. Wunderlin, R.P., 1982. Guide to the Vascular Plants of Central Florida.

(3) Where Florida-friendly plants are to be utilized, use the South Florida Water Management District Plants for Your Florida-Friendly Landscape (as amended) as a reference.

(b) Trees and palms. All required new individual trees shall be species having an average mature spread or crown of greater than 20 feet and having trunk(s), which can be maintained in a clean condition with over ten feet of clear wood. Trees adjacent to walkways, bike paths and rights-of-way shall be maintained in a clean condition with over ten feet of clear wood. Trees having an average mature spread or crown less than 20 feet may be substituted by grouping the same so as to create the equivalent of a 20-foot crown spread. For code-required trees, at least 50 percent of the trees shall be canopy type trees and 50 percent may be palms. The minimum size of the trees at the time of installation shall be as follows:

Single-family single story structures.

Canopy trees:

(50 percent) Ten feet, four-foot spread, 1.75 inch caliper (at 12 inches above the ground).

(50 percent) Eight feet, three-foot spread, 1.50 inch caliper (at 12 inches above the ground).

All other single story structures (multifamily, commercial, and institutional).

Canopy trees: (50 percent) Twelve to 24 feet on average height, six-foot spread, three-inch caliper, six- to seven-foot clear trunk, 65 gallon minimum. Container or ball and burlaped (B&B).

Palms: (50 percent) Twelve feet clear trunk height minimum with 15-foot minimum mature clear trunk height.

All multiple story structures (single-family, multifamily, commercial, and institutional).

Canopy trees:

(25 percent) Twelve to 14 feet on average height, six-foot spread, three-inch caliper, seven-foot clear trunk, 65-gallon minimum. Container or ball and burlaped (B&B).

(25 percent) Sixteen to 18 feet on average height, seven-foot spread, four-inch caliper, seven-foot clear trunk, 100 gallon minimum. Container or ball and burlaped (B&B).

Palms:

(25 percent) Twelve-foot clear trunk height minimum with 15-foot minimum mature clear trunk height.

(25 percent) Fifteen-foot clear trunk height minimum with 18-foot minimum mature clear trunk height.

A grouping of three palm trees will be equivalent to one canopy tree. Exceptions will be made for Roystonia spp. (Florida Royal Palm) and Phoenix spp. (Canary Island Date Palm not including Roebelenii) which shall count one palm tree for one canopy tree. Also, exceptions will be made for Cocos spp. (Coconut Palm) and Arecastrum spp. (Queen Palm) which shall count two palm trees for one canopy tree. In side and rear yard locations, palms can only be substituted for 50 percent of the canopy tree requirement. Front yards may have 75 percent palms, and are encouraged within commercial zoning districts.

(c) Tree species mix. When trees are required to be planted to meet the requirements of this code, a mix of species shall be provided. The number of species to be planted shall vary according to the overall number of trees required to be planted. The minimum numbers of species to be planted are indicated below.

Required Species Mix

Required Number of Trees	Minimum Number of Species
2—10	2
11—20	3
21—30	4
31	5

(d) Screening/buffering. Where screening is required (refer to Table 2) it shall be accomplished by the use of or combination of hedges, shrubs, ground covers, berming, and decorative fences or walls in combination with shrubs, vines and ground covers covering 50 percent or more of the fence or wall. The screening/buffering shall be designed to create within 12 months a 100 percent opaque visual screen/buffer, to be maintained in perpetuity, except for visibility requirements at vehicular access points, street intersections, and pedestrian access points.

(1) Minimum shrub sizes for opaque hedges at time of installation. Ten-gallon container, 48-inch height, 36-inch spread minimum, with the 48-inch height measured from the top of the root ball to the extent of the upper most foliage planted four feet on center.

(2) Minimum shrub sizes at time of installation adjacent to right-of-way and vehicular use areas. Three-gallon container minimum planted 36 inches on center with a minimum height of 24 inches and spread consistent to the species of plant, but meeting a Florida No. 1 or better

nursery grown grade. The 24-inch height is measured from the top of the root ball to the extent of the upper most foliage.

(e) Ground covers. Prior to the issuance of a certificate of occupancy for any single-family residence, multifamily, commercial, or institutional development, ground coverings, as described below, shall be installed. Artificial turf or similar synthetic turf materials are expressly prohibited as ground covers.

(1) Lawn grass. All lawn areas shall be sodded and/or planted with turf species normally grown as permanent lawns within the Southwest Florida area. Solid sod shall be used in swales or other areas subject to erosion. The use of drought-tolerant species is encouraged. Reference the city public right-of-way ordinance for requirements within the public right-of-way.

(2) Florida-friendly landscape. Florida-friendly landscape practices are encouraged in all zoning districts. Landscape areas utilizing Florida-friendly designs are those that comply with the principals of Florida-Friendly Landscape consistent with the standards provided in the following publications, as may be amended from time to time:

- "Florida Yards and Neighborhoods (FYN) and Environmental Landscape Management (ELM)," the University of Florida Cooperative Extension Service (UF-IFAS)

- "Florida-Friendly Best Management Practices for Protection of Water Resources by the Green Industries (2008)," Florida Water Management Districts

- "The Florida Yards & Neighborhoods Handbook", Florida Water Management Districts

- "Waterwise Florida Landscape Guide," Xeric Landscaping with Florida Native Plants," Association of Florida Nurseries

- "Waterfront Property Owner's Guide," Florida Department of Environmental Protection

Landscape designs utilizing the Florida-friendly landscape principles are encouraged for the protection of water quality and water conservation and should incorporate the following nine principals:

a. The right plant in the right place;

b. Efficient watering with properly zoned irrigation systems;

c. Appropriate fertilization;

d. Mulching properly;

e. Attraction of wildlife;

f. Responsible management of yard pests with limited use of chemicals;

g. Recycling yard waste;

h. Reduction of stormwater runoff; and

i. Waterfront protection.

(3) Impervious surfaces, single-family districts. No more than 67 percent of the total lot area within a single-family zoning district shall be covered with impervious surfaces. The use of pervious pavers will be considered in the calculation to the extent the applicant provides credible evidence of the permeability of the surface. Impervious surfaces may not cover a French drain, if required, except that up to two four-feet-wide walkways to a dock facility may be used;

(4) Pervious surfaces, all districts. Pervious yard areas shall include no more than 20 percent coverage with non-organic material such as stone, gravel or pavers unless approved under Florida-friendly landscape principles by the city manager or designee. Pervious yard areas shall include no more than 30 percent organic groundcover such as mulch, bark, pine needles and

yard clippings, unless approved under Florida-friendly landscape principles by the city manager or designee.

(f) Prohibited species. The following plant species shall not be planted:

(1) Enterolobium cyclocarpum (Ear tree).

(2) Melia azedarach (Chinaberry tree).

(3) Bischofia javanica (Bishopwood).

(4) Scaevola frutescens (Australian inkberry).

(5) Dalbergia sissoo (Indian rosewood).

(6) Sapium sebiferum (Chinese tallow tree).

(7) Ardisia elliptica (Shoe button ardisia).

This list is an example and shall be subject to revision as exotic plant species are determined to be noxious, invasive, cause environmental degradation to native habitats, or to be detrimental to human health, safety, or the public welfare by the Florida Exotic Pest Plant Council (FLEPPC). The current FLEPPC List of Invasive Plant Species can be found at www.fleppc.org.

(g) Prohibited invasive exotic species. In addition to the prohibitions outlined in subsection 30-435(f), the following species or seeds thereof shall not be grown, offered for sale, or transported inter-city or intra-city.

(1) Melaleuca spp. (Punk tree).

(2) Schinus terebinthifolius (Brazilian pepper).

(3) Any member of the family Casuarinaceae (Australian pine).

(4) Rhodomyrtus tomentosus (Down rosemyrtle).

(5) Dioscorea bulbifera (Air potato).

(6) Colubrina asiatica (Lather leaf).

(7) Lygodium spp. (Climbing fern).

(8) Syzygium cumini (Java plum).

(9) Mimosa pigra (Catclaw mimosa).

(10) Acacia auriculiformis (Ear leaf acacia).

(11) Albizia lebbeck (Women's tongue).

(12) Ficus microcarpa (Laurel fig).

This list is an example and shall be subject to revision as exotic plant species are determined to be noxious, invasive, cause environmental degradation to native habitats, or to be detrimental to human health, safety, or the public welfare by the Florida Exotic Pest Plant Council (FLEPPC). The current FLEPPC List of Invasive Plant Species can be found at www.fleppc.org.

(h) Regulations. Public and private trees and landscaping shall not be planted or replaced in the right-of-way until a permit has been issued by the city manager or designee in accordance with section 42-76. In addition to the standard for issuance contained in subsection 42-76(f), the following standards shall apply. In the event of a conflict, the more restrictive standard shall govern.

1. No permit is required to perform grass maintenance in public right-of-ways.

2. All permitted trees and plant material placed in public rights-of-way do not create or vest any property right in association with a permit, except in the city. Permittees shall be responsible for the maintenance of such trees and plant material, as provided herein, unless otherwise removed or specified as a condition of the permit issued pursuant to section 42-76

3. A property owner desiring to privately landscape the public right-of-way shall submit a landscape and irrigation plan to the city manager or designee. The application shall include three sets of detailed plans indicating existing rights-of-way facilities, type and location of proposed plantings, and location of electrical and irrigation systems.
4. After review and acceptance of the landscape and irrigation plans, a landscape agreement shall be signed by the permittee to insure that the permittee or his or her successor or assignee shall be responsible to maintain such material and irrigation systems until removed or otherwise specified. The agreement shall be recorded in the official records of Collier County.
5. Tree planting distance from the edge of the sidewalk on private property shall be no closer than 36″ from the trunk of tree. Under no circumstances shall trees be planted within the flow line of a swale regardless of the setback from the edge of the sidewalk.
6. Tree plantings must not interfere with line of sight triangles at anytime or with ingress or egress to the property.
7. Trees planted in the public right-of-way in close proximity (less than ten feet) to underground utilities shall be reviewed and approved by the city manager or designee.
8. Trees planted in the public right-of-way under power supply lines shall be of the type that do not grow taller than 15 feet. The owner shall be responsible to maintain trees under or adjacent to the power supply to prevent power failure.
9. Existing private trees located in the public right-of-way may be adversely impacted by various underground construction activities undertaken by the city. The city shall not be responsible for any adverse impact on existing private trees in the public right-of-way from underground activities undertaken by the city.

(Ord. No. 02-22, § 5, 7-15-2002; Ord. No. 05-02, § 1, 3-21-2005; Ord. No. 09-14, § 4, 10-19-2009; Ord. No. 10-04, § 2.5., 4-19-2010; Ord. No. 11-07, § 2, 6-20-2011)

Sec. 30-436. - Existing plant material.

(a) All new and or redevelopment shall retain existing native and mature vegetation to the maximum extent possible. Existing native vegetation shall be retained unless stormwater management design, necessary grade changes, required infrastructure or approved construction footprints necessitate its removal. The need to remove existing vegetation shall be demonstrated by the applicant as part of the building permit or site development plan review process. Areas of retained vegetation shall be preserved in their entirety with all trees, under story, and ground covers left intact and undisturbed provided that prohibited exotic plant materials as defined herein are to be removed.

(b) During construction, all reasonable steps necessary to prevent the destruction or damaging of existing vegetation shall be taken. No excess soil, additional fill, equipment, liquids, or construction debris shall be placed within the drip line of any vegetation that is required to be preserved, or that will be credited towards the required landscaping.

(c) Protective barriers shall be installed and maintained beyond the drip line of all retained vegetation unless site improvements prohibit installation of barriers beyond the drip line, and shall remain in place for the duration of the construction process phase. The location of the protective barriers shall be determined by a landscape architect or design professional.

(Ord. No. 02-22, § 6, 7-15-2002)

Sec. 30-437. - Tree preservation credits.

Existing native trees may be credited towards meeting the minimum tree planting requirements according to the formula in Table 1. Fractional measurements shall be attributed to the next lowest category.

Table 1. Calculation of Tree Preservation Credits

Existing Crown Spread of Preserved Trees	or	Diameter of Tree at 4.5 Feet Above Natural Grade	=	Number of Tree Credits
50 feet or greater	or	26 inches or greater	=	3
40 to 49 feet	or	20 to 25 inches	=	2
30 to 39 feet	or	13 to 9 inches	=	2
20 to 29 feet	or	8 to 12 inches	=	1
10 to 19 feet	or	2 to 7 inches	=	1
Less than 10 feet	or	1½ to 2 inches	=	1*

*Credited against equivalent required tree only.

(Ord. No. 02-22, § 7, 7-15-2002)

Sec. 30-438. - Site distance triangles, signage and berms.

(a) Safe sight distance triangles at intersections and access points. Where an access way intersects a right-of-way or when a property abuts the intersection of two or more rights-of-way, a minimum safe sight distance triangular area shall be established. Within this area, vegetation shall be planted and maintained in a way that provides unobstructed visibility at a level between 18 inches and ten feet above the adjacent access. (See Figure 1).

Where an access way enters a right-of-way, two safe distance triangles shall be created diagonally across from each other on both sides of the access way. Two sides of the triangle shall extend 15 feet each way from the point of intersection from the edge of pavement and the right-of-way line. The third side of the triangle shall be a line connecting the ends of the other two sides.

Where a property abuts the intersection of two rights-of-way, a safe distance triangle shall be created. Two sides of the triangle shall extend 30 feet along the abutting right-of-way lines, measured from the point of intersection. The third side of the triangle shall be a line connecting the ends of the other two sides.

(b) Signage located within/adjacent to landscape buffer area. All trees and shrubs located within a landscape buffer shall be located so as not to block view of signage. Where specimen trees exist, the signage setback location may be administratively reduced per the land development code. Code required plantings should progress in height away from the street. Signs may be permitted within the

restricted area of the landscape buffer to a minimum setback of one-half the buffer width along with an overall reduction of the sign size requirements as described by 50 percent.

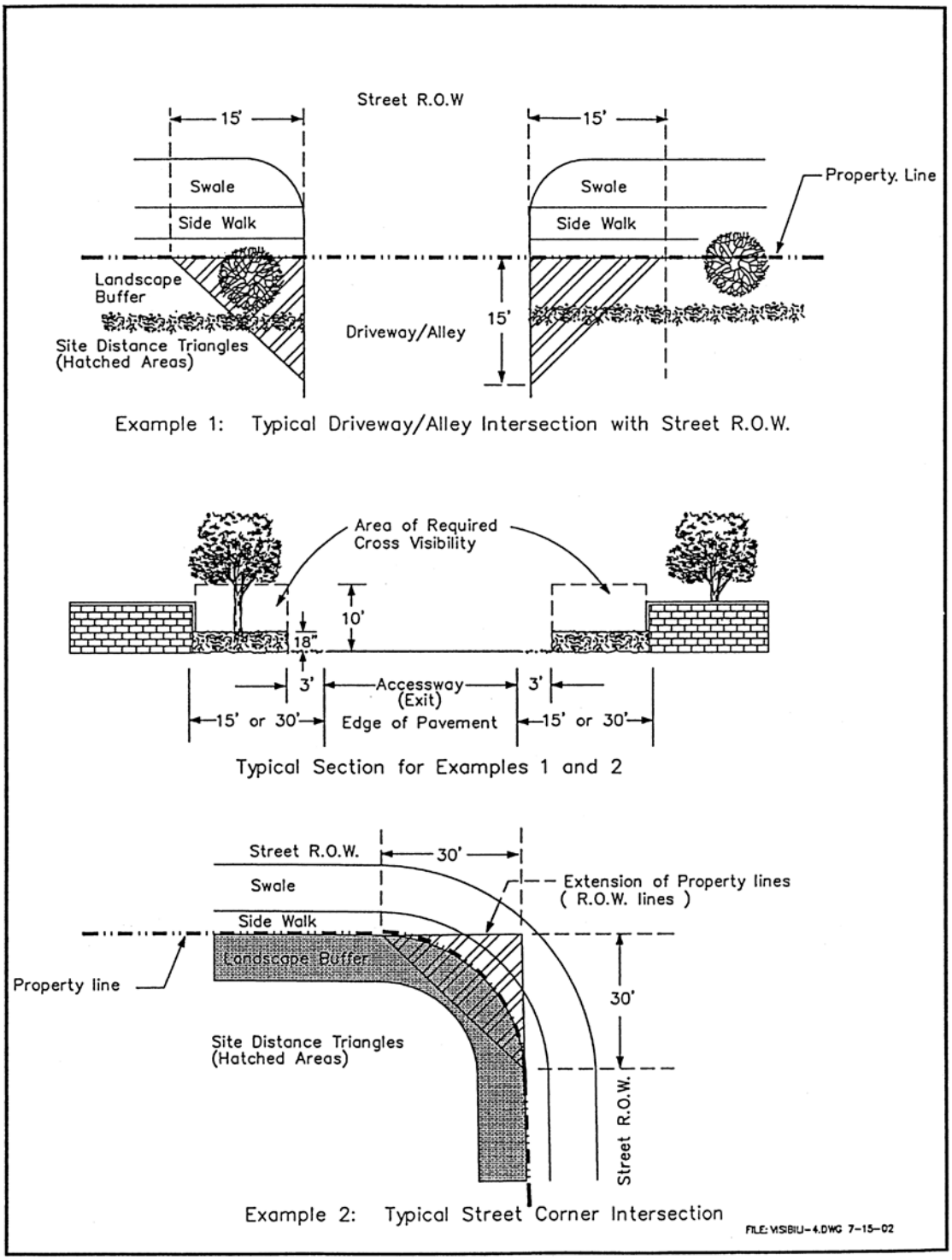

Figure 1. Sight Distance Triangles

(c) Landscape berms. All perimeter landscape berms over two feet in height shall meet or exceed the minimum standards as set forth herein. All grassed berms shall have side slopes no greater than

four to one. Berms planted with ground cover and landscaping shall have side slopes no greater than three to one. Existing native vegetation shall be incorporated into the berms with all slopes fully stabilized and landscaped with trees, shrubs, and ground cover. Landscape berms shall not be placed within easements without written approval from all entities claiming an interest under said easement.

(Ord. No. 02-22, § 8, 7-15-2002)

Sec. 30-439. - Minimum landscaping required for vehicular use areas.

(a) Applicability. The provisions of this section shall apply to all new and redevelopment of off-street parking or other vehicular use areas. Existing landscaping which does not comply with the provisions of this code shall be brought into conformity to the maximum extent possible when: the vehicular use area is altered or expanded except for restriping of lots/drives, the building square footage is changed, or the structure or a unit within the structure has been vacant for a period of 30 days or more and a request for an occupational license to resume business is made. These provisions shall apply to all developments with the exception of single-family, two-family, and mobile home dwelling units, on individually platted lots. Any appeal from an administrative determination relating to these regulations shall be to the board of zoning appeals or equivalent.

(b) Landscaping required in interior of vehicular use areas for multifamily, institutional, and commercial developments. At least ten percent of the amount of vehicular use area on-site shall be devoted to interior landscaping areas. The width of all curbing shall be excluded from the required landscaped areas. All interior landscaped areas not dedicated to trees or to preservation of existing vegetation shall be landscaped with grass, ground cover, shrubs or other landscape treatment. One tree shall be provided for every 250 square feet of required interior landscaped area. Interior landscaped areas shall be a minimum of five feet in width and 150 square feet in area. The amount of required interior landscape area provided shall be shown on landscape plans.

(c) All rows of parking spaces shall contain no more than ten parking spaces uninterrupted by a required landscaped island, which shall measure inside the curb not less than eight feet in width and at least eight feet in length and at least 100 square feet in area. At least one tree shall be planted in each island. These islands shall not be used as retention areas or as swales. Landscape islands for compact car parking areas shall be at least seven feet in width and at least 100 square feet in area. These tree requirements shall be met with existing native trees whenever such trees are located within the parking areas and may be feasibly incorporated into the landscaping. Where existing specimen trees are retained in landscape islands, the amount of parking spaces in that row may be increased to 15. A parking stall shall be no farther than 50 feet from a tree, measured to the tree trunk. Interior landscaping areas shall serve to divide and break up the expanse of paving at strategic points and to provide adequate shading of the paved area. Perimeter landscaping shall not be credited toward interior landscaping.

(d) Interior landscaping areas shall be provided within the interior of all vehicular use areas. Landscaped areas, wall structures and walks shall required protection from vehicular encroachment through appropriate wheel stops, curbs or other structures.

(e) Vehicular overhang of landscape areas. The front of a vehicle may overhang any landscaped area a maximum of two feet, provided the landscaped area is protected by motor vehicle wheel stops or curbing. Two feet of such landscaped area or walkway may be part of the required depth of each abutting parking spaces. Walkways shall be a minimum of six feet in width if a vehicle is to overhang the walkway. The landscaping of the two-foot area of vehicular overhang shall be accomplished with ground covers only that reach height of 12 inches or less and shall not be a woody type plant.

(Ord. No. 02-22, § 9, 7-15-2002)

Sec. 30-440. - Minimum landscaping requirements.

(a) Landscaping for all new development, including single-family, two-family, mobile home, multifamily, commercial, and institutional uses shall include as a minimum, the number of trees set forth below. Areas dedicated as preserves and conservation areas shall not be counted to meet the requirements of this section. When calculating minimum tree requirements, a fractional unit of 0.50 or greater shall require an additional tree.

(1) Single-family, two-family, and mobile home developments. One canopy tree per 2,500 square feet of lot area, or two canopy trees per lot, whichever is greater, with the maximum number required: 15 trees per lot. One or more canopy trees, palms, or grouping of palms meeting the code requirements shall be located within ten feet of the front property line.

(2) Multifamily developments. One canopy tree per 2,000 square feet of pervious site area excluding preserves. This is in addition to other landscaping requirements.

(3) Commercial and institutional developments. One canopy tree per 3,000 square feet of pervious site area excluding preserves. This is in addition to other landscaping requirements.

(4) Building perimeter plantings. All commercial, institutional, and multifamily developments inclusive of accessory uses shall provide building perimeter plantings in the amount of 100 square feet per 1,000 square feet of proposed building ground level floor area, except within the Elkcam Circle Zoning Overlay. These planting areas shall be located adjacent to the building and shall consist of landscape areas, raised planters, or planter boxes that are a minimum of five feet wide. Seating courtyards, eating areas and plazas may be incorporated within them. Additional design criteria is provided in article VIII.

(Ord. No. 02-22, § 10, 7-15-2002)

Sec. 30-441. - Minimum landscape buffering and screening between uses.

(a) Applicability. The buffering and screening shown in Table 1 shall be required under this section and shall apply to all new and redevelopment of commercial, institutional, and multifamily development. Existing landscaping which does not comply with the provisions of this section shall be brought into conformity to the maximum extent possible when the vehicular use area is altered or expanded except for restriping of lots/drives, the building square footage is changed, or the structure or a unit within the structure has been vacant for a period of 30 consecutive days or more and a request for an occupational license to resume business is made.

(b) The buffering and screening provisions of this code will be applicable at the time of planned unit development (PUD), subdivision plat (PSP), or site development plan (SDP) review, with the installation of the buffering and screening required pursuant to Table 2. Where a more intensive land use is developed contiguous to a property within a similar zoning district, the community development director or designee may require buffering and screening the same as for the higher intensity uses.

(c) Landscape buffering and screening standards shall conform to the minimum buffering and screening standards of the zoning district it most closely resembles. The community development director or designee may approve alternative landscape buffering and screening standards when such alternative standards have been determined by use of professional acceptable standards to be equivalent to or in excess of the intent of this code.

(d) Standards. Trees and shrubs shall be installed at the height specified in this code, unless otherwise noted.

(e) Water management systems, which shall include retention and detention areas, swales, and subsurface installations, shall be permitted within a required buffer provided they are consistent with accepted engineering and landscaping practice and the following criteria:

(1) Water management systems shall not exceed 50 percent of the square footage of any required side, rear, or front yard landscape buffer.

(2) Water management systems shall not exceed 70 percent of the required buffer width. A minimum five-foot wide 10:1 level planting area shall be maintained where trees and hedges are required.

(3) Exceptions to these standards may be granted on a case-by-case basis, evaluated on the following criteria:

a. Water management systems, in the form of dry retention, may utilize an area greater than 50 percent of the buffer when existing native vegetation is retained at natural grade.

b. For lots of record 10,000 square feet or less in size, water management areas may utilize an area greater than 50 percent of the required side and rear yard buffers. A level planting area of at least three feet in width shall be provided in these buffers.

(f) Vehicular use, or any other impervious areas shall not occupy any part of a required alternative A, B, or C type buffer except as written below:

(1) Driveways and sidewalks that are constructed perpendicular to the required buffer and provide direct access to the property;

(2) Parallel meandering sidewalks occupy the buffer and its width is increased by the equivalent sidewalk width.

(g) Types of buffers. Within a required buffer area, the following alternative shall be used based on the matrix in Table 2.

Alternative A: Ten-foot-wide landscape buffer with trees spaced no more than 30 feet on center.

Alternative B: Fifteen-foot-wide, opaque within one year, landscape buffer maintained at six feet in height, which may include a wall, fence, hedge, berm or combination thereof, including trees spaced no more than 25 feet on center. When planting a hedge, it shall be a minimum of ten gallon plants, 48 inches in height, three feet in spread and spaced a minimum four feet on center at planting.

Alternative C: A landscape buffer shall be required adjacent to any road right-of-way external to the development project. Said landscape buffer shall be consistent with the provisions of the city master plan, which is incorporated by reference herein. The minimum width of the perimeter landscape buffer shall vary according to the ultimate width of the abutting right-of-way. Where the ultimate width of the right-of-way is zero to 99 feet, the corresponding landscape buffer shall measure at least ten feet in width. Where the ultimate width of the right-of-way is 100 or more feet, the corresponding landscape buffer shall measure at least 15 feet in width. Developments within the town center mixed use district shall provide a perimeter buffer of at least 20 feet in width, regardless of the width of the right-of-way. The exception to this landscape buffer requirement is property located within the Elkcam Circle Overlay as provided for in the land development code. The town center mixed use district right-of-way buffer requirements shall not be applicable to roadways internal to the development or along alleys, however, these areas shall provide the applicable landscape buffer per this code.

Trees shall be provided in an amount equivalent of one tree per 30 feet of buffer length abutting the right-of-way. Trees shall be spaced so to provide for an unimpeded proper and mature growth of the trees being used. Trees with less than a 20 foot crown spread shall not be used within this buffer unless under overhead utilities or are trees above the number required of this code. Applicants whose properties require installation of type "C" buffers within 500 feet of a major arterial or collector roadway intersection shall install required canopy trees at 16—18 feet heights with seven-foot minimum canopy spread, 4 inch diameter caliper and seven-foot clear trunks or palms with 15-foot clear trunks within the type "C" buffer areas.

A double hedge row of at least 24 inches in height at the time of planting and attaining a minimum of three feet height within one year shall be required in the landscape buffer where vehicular areas and parking spaces are adjacent to the road right-of-way.

The remaining area of the landscape buffer shall consist of existing native vegetation, grass, ground cover, or other landscape treatment. Every effort shall be made to retain and incorporate the existing native vegetation in these areas.

Type "C" buffers shall be permitted to utilize the adjacent right-of-way roadway shoulder for landscape and retention area purposes and based upon the following conditions:

(1) A meandering sidewalk is provided crossing back and forth over the property or right-of-way line.

(2) Retention areas recreated so to be shallow dry type retention areas and not continuous in line or length. Retention areas must also be interconnected with piped drainage systems and connected into the site's overall system or outfall area.

(3) Include along each right-of-way one pedestrian entrance/rest area containing decorative paving, one bench, one bike rack and one trash receptacle. The one per right-of-way requirement can be reduced to one if the pedestrian entry/rest area is located at the corner of the property at a roadway intersection and enlarged in areas containing two each of the above listed site furnishings. Parking requirements may be reduced by one space per pedestrian entry/rest area.

(4) The plan and layout is approved by the city's public works director and the community development director or designee.

Table 2 Table of Buffer Requirements by Land Use Classifications

	Adjacent Properties District							
Subject Property's District/Use	1	2	3	4	5	6	7	8
1.) Residential (RSF) single-family	-	B	B	B	B	*	C	-
2.) Residential RMF-6, RMF-12, RMF-16) multifamily	B	A	A	B	B	*	C	-
3.) Residential Tourist (RT)	B	A	A	A	B	*	C	-
4.) Commercial (C-1, C-1/T, C-2, C-3, C-4, C-5)	B	B	B	A	B	*	C	B
5.) Public Use (P), community facility (CF), Golf Course Clubhouse, Amenity Center	B	B	B	B	A	*	C	A
6.) Planned unit development (PUD)	*	*	*	*	*	*	C	*
7.) Vehicular rights-of-way	C	C	C	C	C	C	-	-
8.) Golf course	-	-	-	-	-	-	-	-

The letter listed under "adjacent properties district" shall be the landscape buffer and screening alternative required. The "-" symbol shall represent that no buffer is required. The PUD district buffer, due

to a variety of differing land uses, is indicated by the "*" symbol, and shall be based on the landscape buffer and screening of the district or use with the most similar types, densities and intensities of use. Where a conflict exists between the buffering requirements and the yard requirements of this code, the yard requirements of the subject-zoning district shall apply.

Buffer areas located between commercial out parcels within a shopping center may be shared and a minimum of ten feet wide. This does not apply to right-of-way buffers.

(Ord. No. 02-22, § 11, 7-15-2002)

Sec. 30-442. - Marco Island streetscape plan.

(Reserved.)

(Ord. No. 02-22, § 12, 7-15-2002)

Sec. 30-443. - Cul-de-sac beautification.

Permission for any cul-de-sac improvements by residents must be submitted to the city public works department for approval. Submissions must include a drawing showing all improvements along with an agreement to provide maintenance for the improvements.

(Ord. No. 02-22, § 13, 7-15-2002)

Sec. 30-444. - Tree fund.

The City shall establish a tree fund, which shall be used exclusively for plant replacement and to provide necessary maintenance of damaged trees. Penalties, fines and tree replacement payments, as provided for in this article, shall be deposited into the tree fund. The public may donate money to the city's tree fund to assist the city in its beautification efforts.

(Ord. No. 09-14, § 4, 10-19-2009)

Secs. 30-445—30-480. - Reserved.

ARTICLE V. - OFF-STREET PARKING AND LOADING

Sec. 30-481. - Intent and purpose.

It is the intent of this article that the public health, safety, comfort, order, appearance, convenience, interest, and general welfare require that every building and use erected or instituted after the effective date of this article shall be provided with adequate off-street parking facilities for the use of occupants, employees, visitors, customers or patrons. It is also the intent of this article that certain uses must provide adequate off-street loading facilities. Such off-street parking and off-street loading facilities shall be maintained and continued so long as the use continues.

(Ord. No. 01-16, § 1, 10-1-2001)

Sec. 30-482. - General applicability.

Wherever in any zoning district off-street parking facilities are provided for the parking or display of any and all types of vehicles, boats or heavy construction equipment, whether such vehicles, boats or equipment are self-propelled or not, and all land upon which vehicles traverse the property as a function of the primary use (including "drive-in" facilities) hereinafter referred to as "other vehicular uses," such facilities and land shall conform to the minimum requirements of this article.

(1) Repair of existing building or use. Off-street parking and off-street loading facilities shall be provided as set forth in this article. Conforming buildings and uses existing as of the effective date of this article may be modernized, altered or repaired without providing additional off-street parking or off-street loading facilities, provided there is no increase in floor area or capacity or change in use which would require additional off-street parking.

(2) Enlargement of existing building or use. Where a conforming building or use existed as of the effective date of this article and such building or use is enlarged in floor area, volume, capacity, or space occupied, off-street parking and off-street loading as specified in this article shall be provided for the additional floor area, volume, capacity, or space so created or used.

(3) Change of existing use. Where a use and building existed at the effective date of this article and the use is changed after the effective date of this article and where this article requires such later and changed use to have greater required off-street parking, then additional off-street parking shall be provided for the later and changed use as required under this article.

(Ord. No. 01-16, § 2, 10-1-2001)

Sec. 30-483. - Off-street parking design standards.

Off-street parking facilities and other vehicular facilities, both required and provided, in all zoning districts, shall:

(1) Identification. Be identified as to purpose and location when not clearly evident.

(2) Surfacing. The following surfacing requirements apply to all zoning districts other than single-family residential districts (RSF-2, RSF-3, RSF-4):

a. Be surfaced with asphalt, concrete, solid concrete pavers, or other approved concrete or asphalt surfaces, maintained in a smooth, well-graded condition.

b. Up to 70 percent of the parking spaces for houses of worship and schools may be surfaced with grass or lawn, provided:

1. Spaces that are not paved shall be compacted, stabilized, well drained and surfaced with a durable grass cover.

2. Driveways, handicapped spaces and access aisles shall be paved.

3. When the community development director determines that the paving of some or all parking spaces for houses of worship and schools will have significant negative environmental impacts, the director may require that these parking spaces not be paved. Upon approval of the community development director, a suitable material (limerick excluded) with a suitable stabilized subgrade may be substituted for the above materials.

4. Fire department access roads shall consist of roadways, fire lanes, parking lots, lanes, or a combination thereof.

5. Required fire lanes shall be provided with the inner edge of the roadway no closer than ten feet and no further than 30 feet from the building. Such lanes shall have a surface designed to accommodate fire apparatus with a minimum weight of 32 tons.

(3) Surfacing—Single-family residential districts (RSF-2, RSF-3, RSF-4).

a. Top finish materials for driveways and parking areas outside of the right-of-way may include concrete, asphalt, pavers, stone, crushed shell or turf parking systems specifically designed for the parking of automobiles.

b. Use of any materials that are non-solid in nature, such as shell or stone, must meet the following specifications:

1. Must be compacted and stabilized;

2. May not consist of particles in excess of 1½ inches in diameter;

3. May not be finished with limerick;

c. Non-solid materials such as shell or stone may not be used if the slope of the driveway exceeds a 1-to-8 ratio (12.5 percent grade).

d. Non-solid materials must be maintained to eliminate overflow into the right-of-way.

e. Driveways existing as of the date of this section that are made of materials that are non-solid in nature, but do not meet the conditions of paragraph (b) above, may continue as legal non-conforming uses pursuant to section 30-6 of the Code. However, driveways made of materials that are non-solid in nature that do not meet the maximum limitation of slope under paragraph (c) shall not be continued as legal non-conforming uses and shall be required to be brought into compliance with the maximum slope standards of paragraph (c) within two years of the effective date of this section.

f. Nothing in this section shall limit the application of any existing or future regulation as to maximum or minimum pervious area requirements or other requirements of the land development code.

(4) Lighting. Outdoor lighting shall conform to the applicable provisions of chapter 6, article V.

(5) Access. Be arragned for convenient and safe access of pedestrians and vehicles.

(6) Internal circulation. Be arranged so that no vehicle shall be forced onto any street to gain access from one aisle to another aisle.

(7) Parking spaces. If the number of parking spaces required by this article is two or more, all parking spaces shall be striped or marked with paint or other suitable pavement marking material.

(8) Landscaping. Be constructed so that interior portions of off-street vehicular facilities not utilized specificallly as a parking space or maneuvering or other vehicular use area shall not be paved but shall be landscaped in accordance with this article.

(9) Dead-end aisles. Off-street parking areas shall be designed so as not to create dead-end aisles except as may be permitted in accordance with provisions of the building code, or other applicable codes. Aisles designed for one-way traffic flow shall have painted arrows not less than four feet at each end of the aisle indicating the direction of travel. Dead-end aisles shall provide a turnaround feature (hammerhead, cul-de-sac, apron, etc.).

(10) Redesign. Whenever any part of an off-street parking lot and/or facility is redesigned, those pavement markings that no longer apply shall be completely obliterated.

(Ord. No. 01-16, § 3, 10-1-2001; Ord. No. 10-04, § 2.1., 4-19-2010)

Sec. 30-484. - Locational requirements for off-street parking facilities.

(a) All required off-street parking facilities shall be located on the same lot they serve; on a contiguous lot under the same ownership that is zoned for use as a parking lot; on a contiguous lot under different ownership that is zoned for use as a parking lot; or shall be approved under the provisions of subsection (3) as provided below:

(1) Off-street parking on lots under same/unified ownership The city manager or his designees may approve off-street parking on contiguous lots under the same ownership provided the off-street parking lot is not separated by an arterial or a collect roadway. A site development plan shall be submitted to the director which indicates that the off-street lot(s) are zoned for use as a parking lot.

(2) Off-street parking on lots under different ownership. The city manager or his designees may approve off-street parking on contiguous lots that are under different ownership. A site development plan shall be submitted to the director which includes:

a. A minimum ten-year lease agreement between the property owners, including a provision that if and when the lease expires, the property owner requiring the off-street parking shall make other provisions for the required parking. The city attorney shall review this agreement for form and legal sufficiency. The petitioner shall record the lease in the official records of Collier County before approval of the site development plan; and

b. At least 33 percent of the required parking is on the lot with the principal structure; and

c. The off-street lot(s) are zoned for use as a parking lot.

(3) Off-street parking requiring public hearing. The board of zoning appeals, after review and recommendation by the planning board, may approve off-street parking under the following circumstances:

a. The permitted use and the proposed off-street parking lot are separated by a collector or arterial roadway.

b. The lot proposed for off-street parking is not zoned commercial.

c. The lot proposed for off-street parking is not contiguous.

d. The lot proposed for off-street parking provides greater than 67 percent of the required parking for the principal structure, if under different ownership.

e. Parking reservations, in which the petitioner believes that the number of required parking spaces is excessive and wishes to reduce the number of parking spaces required to be constructed, while reserving the land area for future parking spaces if determined necessary by the city manager or his designees or the board of zoning appeals.

f. The lot proposed for off-street parking provides alternative parking spaces.

(b) The planning board and board of zoning appeals shall consider the following criteria for the approval of off-street parking as provided for in subsection (a) above:

(1) Whether the amount of off-street parking is required by the parking regulations, or is in excess of these requirements.

(2) The distance of the farthest parking space from the facility to be served.

(3) Pedestrian safety if the lots are separated by a collector or arterial roadway.

(4) Pedestrian and vehicular safety.

(5) The character and quality of the neighborhood and the future development of surrounding properties.

(6) Potential parking problems for neighboring properties.

(7) Whether the internal traffic flow is required to leave the site to reach the proposed off-street parking.

(8) Whether vehicular access shall be from or onto residential streets.

(9) Whether buffers adjacent to the property zoned residential are 15 feet in width and include a wall in addition to required landscaping.

(10) Whether the off-street parking area will be used for valet parking.

(11) Whether the off-street parking will be used for employee parking.

(12) Whether there is a need for a traffic analysis.

Off-street parking must be accessible from a street, alley or other public right-of-way and all off-street parking facilities must be so arranged that no motor vehicle shall have to back onto any street, excluding single family and two-family residential dwellings and churches approved under the parking regulations.

(Ord. No. 01-16, § 4, 10-1-2001; Ord. No. 2010-03, § 1, 3-15-2010; Ord. No. 14-07, § 2.1, 8-4-2014)

Sec. 30-485. - Dimensional standards.

(a) Minimum aisle widths. Minimum aisle widths shall be as follows:

Angle of Parking	Aisle Width (One-Way)	Aisle Width (Two-Way)
Parallel	12 feet*	20 feet
30 degrees	12 feet*	22 feet
45 degrees	12 feet*	22 feet
60 degrees	18 feet	24 feet
90 degrees	22 feet	24 feet

*The fire department may require these to be increased to 14 feet where an acute turning radius is present.

(b) Minimum parking space size. Each parking space shall be a minimum of nine feet by 18 feet in size, or 16 feet in depth measured from the aisle width to the face of the wheel stop, provided there is adequate space in front of the wheel stop for two feet of vehicular overhang.

(c) Minimum compact parking space size. In retail commercial projects, up to 25 percent, and in all residential, office and industrial projects, up to 35 percent of the required parking spaces may be designated as compact spaces with minimum dimensions of eight feet by 16 feet. Compact spaces will only be allowed in projects requiring five or more parking spaces. Compact spaces shall be designated by signs on every third space, painted "Compact" on each pavement space and double-striped to indicate their status.

(d) Off-street parking adjacent to alley right-of-way. Parking spaces that take direct access from an alley right-of-way shall be separated from the side yard property line by a ten-foot wide landscape buffer island. A five-foot wide minimum landscape buffer shall be placed along the front of these spaces when parking is at direct access from the alley. Parking spaces shall be provided entirely on the subject property and shall not encroach into the alley right-of-way.

(e) Off-street parking—Single-family and duplex dwelling units. All new single-family and duplex dwelling units shall provide at least two off-street parking spaces per unit, inclusive of garage area.

Vehicles shall only be parked on surfaces specified in section 30-483. Vehicle parking shall not block or overhang public sidewalks at anytime.

Driveways shall be setback a minimum of 7.5 feet from any property line for front-loading garages or five feet for side-loading garages. The setback is required to facilitate the installation and maintenance of landscape materials and prohibits vehicular parking. For purposes of accommodating design issues associated with on-site parking spaces, including certain lot shapes and side-loaded garages, exceptions for these setbacks may be made for a distance along the property line not exceeding 30 linear feet, but in no case shall a driveway setback be approved which is less than two feet from a property line at any point. Acceptable exceptions are depicted in exhibits one, two, and three which is attached to and made a part of this section. Prior to the issuance of a driveway permit, the applicant shall demonstrate that the proposed design will not result in adverse stormwater runoff effects on neighboring property(s).

(Ord. No. 01-16, § 5, 10-1-2001; Ord. No. 2010-03, § 2, 3-15-2010; Ord. No. 10-04, § 2.2., 4-19-2010; Ord. No. 10-09, § 2.1., 8-16-2010; Ord. No. 14-07, § 2.2, 8-4-2014)

Editor's note— Exhibits one, two and three, as referenced above, are on file and available for inspection in the offices of the city.

Sec. 30-486. - Parking for uses not specifically mentioned.

Requirements for off-street parking for uses not specifically mentioned in this article shall be the same as for the use most similar to the one sought, or as otherwise determined by the community development director, it being the intent of this article to require all uses to provide off-street parking, unless specific provision is made to the contrary.

(Ord. No. 01-16, § 6, 10-1-2001)

Sec. 30-487. - Measurements and fractional measurements.

(a) Fractional measurements. When units of measurements determining number of required off-street parking spaces result in a requirement of a fractional space, then such fractional equal or greater than one-half shall require a full off-street parking space.

(b) Off-street parking measurements. Where this code requires off-street parking based on various types of measurements, the following rules shall apply:

    (1) Floor area means, for the purpose of this article only, the gross floor area inside the exterior walls, unless otherwise specifically indicated.

    (2) In hospitals, bassinets do not count as beds.

    (3) In stadiums, sports arenas, houses of worship, and other places of public assembly where occupants utilized benches, pews, or other similar seating arrangements, each 24 lineal inches of such seating facilities count as one seat.

    (4) Where the parking requirements are based on number of employees or persons employed or working in an establishment and the number of employees increases after the building or structure is occupied, then the amount of off-street parking provided must be increased in ratio to the increase of the number of employees.

(Ord. No. 01-16, § 7, 10-1-2001)

Sec. 30-488. - Minimum off-site parking requirements.

Irrespective of any other requirement of this article, each and every separate individual store, office, or other business shall be provided with at least two off-street parking spaces, unless specific provision is made to the contrary. The city manager or his designees may determine the minimum parking requirements for a use which is not specifically referenced below or for which an applicant has provided evidence that a specific use is of such a unique nature that the applicable minimum parking ratio listed in this code should not be applied. In making such a determination the city manager or his designees may require submission of parking generation studies; evidence of parking ratios applied by other counties and municipalities for the specific use; and other conditions and safeguards deemed to be appropriate to protect the public health, safety and welfare.

(1) Parking provided over and above the minimum parking requirements. Developers of commercial and multi-family projects providing off-street parking in excess of 120 percent of the requirements of this code shall request a variance in accordance with the land development code. The developer shall be required to provide double the landscaping required in interior vehicular use areas, for those projects requesting such a variance.

(2) Encroachment prohibited. Required off-street parking shall be located so that no automotive vehicle when parked shall have any portion of such vehicle overhanging or encroaching on public right-of-way or the property of another. If necessary, wheel stops or barriers may be required in order to enforce this provision.

(3) Not to be reduced or changed. Required off-street parking according to the requirements of this code shall not be reduced in area or changed to any other use unless the permitted or permissible use that it serves is discontinued or modified, or equivalent required off-street parking is provided meeting the requirements of this code.

(4) Off-street parking credits. Parking credits shall be granted for new construction, renovations, improvements, and redevelopment of commercial buildings and commercial projects developed with the following amenities. In no case shall the parking credits exceed 20 percent of the total required parking. The parking credits for each category shall only be utilized once per property.

a. Interconnection of parking lots and driveways. A 15 percent reduction in the required amount of off-street parking may be approved for projects providing vehicular interconnects and/or shared driveways to adjacent projects, subject to an off-street parking agreement as specified in this code. The shared driveway must directly access the parking lots on both properties, and the property owner must file a cross-access agreement with the city in order to be eligible for the credit.

b. Pedestrian access. One parking space credit shall be granted to each development for providing a pedestrian walkway(s) a minimum of five feet in width from a public sidewalk to the front door(s) of a street front commercial business or building, and from the storefront walkway to the adjacent properties.

c. Bicycle rack. One parking space credit shall be granted for providing a bicycle rack(s) and pedestrian bench(s) on-site. The bicycle rack shall be capable of storing a minimum of four bicycles and the pedestrian bench shall be a minimum of five feet in length. Bicycle racks and benches shall be placed in a visible location within 15 feet of the front building elevation(s) or along the pedestrian access path. The area around the bicycle rack and bench shall be landscaped with either one minimum 14-foot shade tree and four three-gallon shrubs or three six-foot (gray wood) palm trees and four three-gallon shrubs per every bicycle rack and bench provided. The landscaping is in addition to any other landscape requirements of this code.

d. On-street parking provided within the right-of-way. Where approved by the city for such parking alternatives, commercial projects and developments may provide some of their off-street parking requirement to be satisfied within the public right-of-way (except alleys). The developer can achieve up to a 50 percent credit for the total amount of required parking

spaces provided in the right-of-way. The on-street parking shall be limited to the area located between the intersection of the front yard property lines and the adjacent right-of-way. Parking provided in the right-of-way shall be reviewed through the SDP process. Parking provided in the right-of-way shall be available for public use. There shall be no signs prohibiting and/or regulating parking within the public right-of-way unless so authorized or designated by the city.

e. Recycling facilities. One parking credit shall be granted for the installation of one or more recycling containers, if, in the opinion of the city manager or designee, the use of additional space previously approved for parking becomes necessary for such facilities.

(5) Off-street parking space and stacking requirements. Minimum off-street parking space requirements are set forth below. Where stacking is required, the amount listed does not include the first vehicle being serviced (for drive-in windows, stacking starts ten feet behind the middle of the pickup window) and is computed at 20 feet per vehicle (turns are computed at 22 feet per vehicle, measured at the outside of the driveway). Stacking for one lane may be reduced if the reduction is added to the other lane(s).

Art gallery or museum	1 per 300 square feet of floor area open to the general public.
Athletic fields	25 spaces for each athletic field (baseball, softball, football, soccer, etc.). The city manager or his designees, may administratively reduce this requirement where the applicant can demonstrate a reduced need for the required parking due to the type of athletic facility or where shared parking may be provided on adjacent public property. Grassed parking may be permitted for not more than 50 percent of the provided parking.
Auto maintenance center (drive-through)	1 per 250 square feet. Stacking for 5 vehicles for the first bay and 2 for each additional bay.
Auto service station	3.5 per service bay or 1 per 250 square feet, whichever is greater.
Auto/truck/trailer leasing	1 per 500 square feet of roofed building area plus 1 per 2,000 square feet of paved outdoor vehicle storage area. These spaces shall not be used for the parking of rental vehicles.
Auto/truck/boat/motorcycle/recreational vehicle repair or body shop	3.5 per service bay or 1 per 250 square feet, whichever is greater.
Auto/truck/boat/motorcycle/recreational	1 per 400 square feet of building area except

vehicle sales or dealership	service/body shop buildings which are 3.5 per service bay or 1 per 250 square feet, whichever is greater; plus 1 per 2,000 square feet of outdoor sales/display area.
Auto/truck washing	1 for self-service wash facilities and 1 per employee of the largest shift for automatic wash facilities. Stacking for 2 vehicles, per stall for self-service wash bays and stacking for 5 vehicles per automatic carwash lane.
Bank or financial institution	1 per 250 square feet on the first floor and 1 per 300 square feet on any other floors. Stacking for 6 vehicles for each drive-up window not to exceed a total requirement of 25 vehicles.
Barbershop/beauty parlor/hair salon	1 per 200 square feet or 3 per barber/beautician haircutting chair, whichever is greater, and 1.5 per station or booth for nails, massages, facials, sun-tanning, etc.
Beverage center (drive-through)	1 per 250 square feet. Stacking for 5 vehicles for the first drive-through aisle and 2 for each additional aisle.
Boat ramp	Minimum 10 spaces per ramp with dimensions of 10 feet wide by 40 feet long. Vehicular parking shall be provided at 4 spaces per ramp.
Boat storage	(Only for dry storage on a site that has no water access for boats and those not associated with a self-service storage facility), 1 per 12 dry boat storage spaces.
Bowling alley	1 per 200 square feet of bowling area which also includes parking for locker room area, bowlers' seating/approach area and storage area plus 1 per 150 square feet for all other uses including offices, snack bars, lounges, game/pool rooms, and sales areas.
Building supplies/ lumberyard	(Only for retail sales where the supplies are primarily stored outside), 1 per 275 square feet of inside retail/office area plus 1 per 1,500 square feet of enclosed or roofed storage structures.

Catering shop	1 per 500 square feet. Sales and display areas shall be computed at 1 per 250 square feet and office area shall be computed at 1 per 300 square feet.
Child care/day nursery/adult day care center	1 per employee of the largest work-shift plus 1 space for every 10 children/adults. In addition, adequate drop-off and pickup areas shall be provided.
Church/house of worship/temple/synagogue	3 for each 7 seats in chapel or assembly area. Other uses are not counted except for residential uses. A reduction of this standard to a minimum of 1 space for each 4 seats, may be applied for in conjunction with an application for a site development plan, through the board of zoning appeals after review and recommendation of the planning board. This reduction will only be allowed for expansion created by congregational growth, for existing church buildings where the applicant can demonstrate a significant hardship exists.
	A stacked or other parking plan shall be submitted with the application which will demonstrate that the vehicle parking will not have negative impacts upon neighboring properties and will provide adequate access for emergency vehicles.
Coin-operated (laundry, self-service)	1 per each 2 washing machines.
Commercial laundry	1 per 500 square feet of building area.
Convenience store/ delicatessen/takeout prepared food store	1 per 200 square feet plus 1 for each 2 seats provided for food patrons.
Dance, art, music studio	1 per 250 square feet.
Dry cleaning	1 per 300 square feet.
Equipment rental store	1 per 500 square feet plus 1 per 2,000 square feet of outside storage/display areas.

Funeral home/crematories	1 per 75 square feet for room used for services and chapels and 1 per 300 square feet for all other uses.
Furniture/carpet/major appliance store	1 per 600 square feet (this includes retail, office and storage areas).
Golf course	4 per hole plus 1 per 200 square feet for office/lobby/pro shop/health club/clubhouse/lounge/snack bar/dining/meeting room areas and 50 percent of normal requirements for exterior recreation uses including: swimming pools, golf driving ranges, and tennis courts. Golf cart, golf bag and equipment storage rooms; maintenance buildings; and rooms for mechanical equipment shall be computed at 1 per 1,000 square feet.
Golf driving range	1 per 2 driving tees and 1 per practice putting green plus normal requirements for any structures.
Golf (miniature)	1.25 per hole plus normal requirements for any structures.
Hospital	11 per 5 patient beds.
Hotel	11 per 10 guestrooms (this includes the required parking for the hotel office and all accessory recreational facilities that are open to hotel guests only). Accessory uses shall be computed as follows: 50 percent of normal requirements for restaurants, 1 per 400 square feet for other retail uses, 1 per 100 square feet for meeting rooms, ball rooms and convention rooms and 1 per 100 square feet for lounges, bars and nightclubs.
Industrial use, activity manufacturing, processing (not otherwise listed)	1 per 500 square feet or 1 per employee of largest workshift, whichever is greater. Office/retail areas shall be computed at 1 per 275 square feet.
Interior decorator/ design center	1 per 300 square feet of building area.

Kennel/veterinarian	1 per 200 square feet except for animal holding areas. 1 per 10 animal holding areas.
Library, community recreational facility	1 for each 200 square feet or 1 for each 3 seats whichever is greater.
Lounge, bar bottleclub, nightclub, pool hall (drinking establishment)	1 per 50 square feet plus 1 per 75 square feet for any outdoor eating/drinking areas.
Marina, boatel	1 per 2 wet boat slips excluding those used for charter boats plus 1 per 5 dry boat storage spaces. Wet slips used for charter boats (including those for fishing, shelling, diving, and sightseeing purposes) are computed at 1 per 3 boat passengers based on the maximum number of passengers and charter boats used for dining are computed at 1 per 2 boat passengers based on the maximum number of passengers. Each parking space provided to meet the marina's boat slip or dry storage parking requirements may also be credited towards meting 100 square feet of the parking requirements for the marina or any permitted marina-related activities excluding restaurants, lounges/bars and private clubs. Uses not receiving credit from parking provided for boat slips or dry storage spaces shall provide parking at the normal rate for those uses as required within this code.
Medical/dental office or clinic (outpatient care facility)	1 per 200 square feet.
Model home sales office/center	4 for the first unit and 1.5 for each additional unit.
Motel	12 per 10 guestrooms (this includes the required parking for the motel office and all accessory recreational facilities designed primarily for motel guests). Where accessory uses are designed primarily for motel guests, they shall be computed as follows: 67 percent of normal requirements for restaurants, 1 per 350 square feet for other retail uses, 1 per 100 square

	feet for meeting rooms, ballrooms and convention rooms and 1 per 75 square feet for lounges, bars and nightclubs.
Nursery, plant (retail)	1 per 250 square feet of roofed and enclosed building area plus 1 per 2,000 square feet of outside display area open to the public.
Nursery, plant (wholesale)	1 per employee of largest work-shift plus 1 per 10,000 square feet of display area and 1 per acre of growing areas.
Office	1 per 300 square feet.
Office (contractor's)	1 per 300 square feet of office area and 1 per 500 square feet of roofed storage area, plus 1 per each company vehicle that will be parked overnight.
Post office	1 per 100 square feet.
Private organizational club, lodge or fraternal organization	1 per 100 square feet or 1 per 3 seats that will be set up at any time, whichever is greater. This shall be computed on all areas used for offices, meeting rooms, restaurants, dining rooms and indoor recreation. Other uses such as marinas, retail areas and outdoor recreation areas require additional parking at normal requirements.
Printing establishment	1 per 200 square feet of building area. Retail sales areas shall be calculated at 1 per 250 square feet and office area shall be calculated 1 per 300 square feet.
Public buildings (fire, emergency medical service or sheriff station and jail)	1 per 200 square feet for administrative office area and 2 per employee of the largest shift for all other areas plus 1 per 5 prisoners based on the maximum holding capacity for any jails.
Recreation facilities (indoor) sports, exercise, fitness, aerobics, or health club/skating rink/game room/bingo parlor	1 per 100 square feet.

Recreation facilities (outdoor) tennis, racquetball or handball courts	3 per court plus other uses as required.
Research laboratory	1 per 300 square feet of office area plus 1 per 500 square feet of other areas or 1 per employee of largest work-shift, whichever is greater, plus 3 for visitors.
Residential uses:	
Boarding/rooming house, bed and breakfast residence	1 per rented room plus 2 for owners/employees.
Convalescent home, nursing home, home for the aged, rehabilitation facility	2 per 5 beds.
Duplex	2 per dwelling unit.
Single-family house, town/row house, mobile home, guesthouse, caretaker's residence	2 per unit.
Multifamily dwelling	All units shall have 1 per unit plus visitor parking computed at 0.5 per efficiency unit, 0.75 per 1-bedroom unit, and 1 per 2-bedroom or larger unit. Office/administrative buildings shall have parking provided at 50 percent of normal requirements.
	When small-scale recreation facilities are accessory to a single-family or multifamily project and intended only for the residents of that project, exclusive of golf courses/clubhouses, the recreation facilities may be computed at 50 percent of normal requirements where the majority of the dwelling units are not within 300 feet of the recreation facilities and at 25 percent of normal requirements where the majority of the swelling units are within 300 feet of the recreation facilities. However, any recreation facility shall have a minimum of 2 spaces exclusive of parking spaces for dwelling units.
Nursing home	Family care facility, group care facility (category I and

	category II), and care unit, see LDC for group housing parking requirements.
Restaurant (walk-up or drive-through with walk-up window and/or outdoor seating)	1 per 80 square feet for public use areas including outdoor eating areas or 1 per 2 seats, whichever is greater, and for non-public use areas (kitchen, storage, freezer, etc.) 1 per 200 square feet. A stacking area of 9 vehicles for the first dive-through lane and 6 for any additional drive-through lanes.
Restaurant (drive-through with no walk-up window or outdoor seating)	1 per 100 square feet. A stacking area of 10 vehicles for the first dive-through lane and 7 for any additional drive-through lanes.
Restaurant (fast food)	1 per 70 square feet for public use areas including outdoor eating areas or 1 per 2 seats, whichever is greater, and for non public use areas (kitchen, storage, freezer, etc.) 1 per 200 square feet. A stacking area of 9 vehicles for the first drive-through lane and 4 for any additional drive-through lanes.
Restaurant (sit down)	1 parking space per 4 seats for both indoor and outdoor seating. Credit for boat slip parking is allowed where the slips have all necessary permits and are located on navigable waterways, using the formula 1 boat slip = 1 vehicle space, provided that each and all boat skips credited shall not be leased or rented for boat storage or utilized for any purpose other than customers frequenting said restaurant. Credit for boat slip parking shall be limited to a maximum of 10 percent of a restaurant's required parking not to exceed a total credit of 10 parking spaces, with the amount credited determined by the city manager or his designees based on the likelihood of restaurant customers using these wet slips during peak business hours of the restaurant.
Retail shop or store (not otherwise listed) and department stores	1 per 250 square feet of indoor/outdoor retail and office areas plus 1 per 500 square feet for indoor/outdoor storage areas that have no access for

	the general public and partly enclosed or open air garden centers.
Schools:	
Business school/vo-tech	2 per 5 students plus 4 per 5 faculty/staff members.
Elementary/junior high school	5 per 4 staff/faculty members.
Senior high school	1 per faculty/staff member plus 1 per 5 students.
Shopping center	1 space per 250 square feet for centers with a gross floor area of at least 16,000 square feet and not having significant cinemas/theaters (none or those with a total cinema/theater seating capacity of less than 5 seats per 1,000 square feet of the shopping center's gross floor area). No more than 20 percent of a shopping center's floor area can be composed of restaurants without providing additional parking for the floor area over 20 percent. The parking requirement for restaurant floor area exceeding 20 percent shall be calculated at 1 parking space per 60 square feet including outdoor waiting and/or seating areas, or 1 per 2 seats, whichever is greater. Rear parking requirements: When more than 10 percent of a shopping center's total parking requirement is placed in the rear of the shopping center, the center shall have convenient and well-lighted front and rear accesses for patrons and employees and the rear buildings shall be architecturally finished adjacent to rear accesses.
Sports arena, stadium (outdoor), racetrack, theater, cinema, auditorium, or public assembly area not otherwise listed	1 for each 3 seats/patrons allowed to stand or 1 space per 40 square feet of spectator seating/standing areas, whichever is greater plus 1 for each employee/non-spectator who will be present during performances

	excluding those arriving by buses. Bus parking is required is when employees, non-spectators or spectators will be arriving by bus.
Storage facility (self-service)	1 per 20,000 square feet of storage buildings plus 1 per 50 vehicle/boat storage spaces plus 1 per 300 square feet of office areas. Minimum of 4.
Supermarket/grocery/farm stand	1 per 250 square feet. Supermarkets shall also meet the green space requirements and rear parking requirements as shown pursuant to shopping centers as set forth in this section.
Swimming pool/hot tubs/spas (outdoor)	1 per 75 square feet of water areas for the first 1,000 square feet and 1 for each additional 125 square feet of water areas. A single-family house is exempt from this requirement.
Taxi stand/office	1 space for each employee on the largest working shift, plus 1 space per taxi.
Television/radio studio	1 per employee of largest shift or 1 per 400 square feet, whichever is greater; plus 3 for visitors.
Temporary parking for sport events, religious events or community events	In the case of a church, community or other sporting event which operates on an intermittent or seasonal basis, the required off-street parking may be provided on a temporary basis and need not be permanently designated, paved, drained, or landscaped, provided the use has been approved and [a permit] issue by the development services director in accordance with applicable standards for the use.
Warehouse, wholesale establishment	1 per 1,000 square feet except for sales/office areas which are 1 per 275 square feet.

(Ord. No. 01-16, § 8, 10-1-2001; Ord. No. 04-01, § 1, 2-2-2004; Ord. No. 06-01, § 1, 2-6-2006; Ord. No. 2010-03, § 3, 3-15-2010; Ord. No. 10-10, § 2.1., 8-16-2010; Ord. No. 14-07, § 2.3, 8-4-2014)

Sec. 30-489. - Off-street loading.

(a) Off-street loading facilities are required by this code so that vehicles engaged in loading shall not encroach on or interfere with public use of streets and alleys by pedestrians and automotive vehicles and so that adequate space shall be available on-site for the unloading and loading of goods, materials, or things for delivery or shipping. Off-street loading facilities supplied to meet the needs of one use may not be considered as meeting the needs of another use. Off-street parking facilities may not be used for or counted as meeting off-street loading requirements.

(b) When the use of a structure or land or any part thereof is changed to a use requiring off-street loading facilities, the full amount of off-street loading space required shall be supplied and maintained. When any structure is enlarged or any use extended so that the size of the resulting occupancy requires off-street loading space, the full amount of such space shall be supplied and maintained for the structure or use in its enlarged or extended size.

(c) Each off-street loading space shall be directly accessible from a street or alley without crossing or entering any other required off-street loading space or off-street parking space. Such loading space shall be accessible from the interior of the building it serves and shall be arranged for convenient and safe ingress and egress by motor truck and/or trailer combination.

(d) A plan shall be submitted with every application for a building permit for any use or structure required to provide off-street loading facilities. The plan shall accurately designate the required off-street loading spaces, access thereto, dimensions and clearance.

(e) Collective, joint, or combined provisions for off-street loading facilities for two or more buildings or uses may be made, provided that such off-street loading facilities are equal in size and capacity to the combined requirements of the several buildings or uses and are designed, located, and arranged to be usable thereby.

(f) Off-street loading requirements. Off-street loading spaces shall be provided and maintained as follows:

(1) Each retail store, warehouse, wholesale establishment, industrial activity, terminal, market, restaurant, funeral home, laundry, dry cleaning establishment, or similar use which has an aggregate floor area of:

Square feet	Number of Spaces
5,000 but not over 10,000	1
10,000 but not over 20,000	2
20,000 but not over 50,000	3

Plus one additional off-street loading space for each additional 25,000 square feet over 50,000 square feet or major fraction thereof.

(2) For each multiple-family dwelling facility having at least 20 dwelling units but not over 50 dwelling units: one space. For each multiple-family dwelling facility having over 50 dwelling units: one space, plus one space for each additional 50 dwelling units, or major fraction thereof.

(3) For each auditorium, convention hall, exhibition hall, museum, hotel or motel, office building, sports arena or stadium, two or more buildings or uses may be permitted to combine their off-street loading facilities, provided that such off-street loading facilities meet the requirements of this code, are equal in size and capacity to the combined requirements of the several buildings or uses, and are designed, located, and arranged to be usable thereby; hospitals, sanitariums, welfare institutions, or similar uses which have an aggregate gross floor area of: over 5,000 square feet, but not over 20,000 square feet: one space; plus for each additional 25,000 square feet (over 20,000 square feet) or major fraction thereof: one space.

(4) For facilities not of sufficient size to meet the minimum requirements set forth therein, each such facility shall provide off-street loading on the property, to insure that no deliveries or shipments of goods or products will require the use, however temporary, of any public right-of-way or required off-street parking space for the parking of a delivery vehicle.

(5) For any use not specifically mentioned, the requirements for off-street loading facilities for a use which is so mentioned and to which the unmentioned use is similar shall apply.

(6) Minimum loading space size. Each loading space shall be a minimum of ten feet by 20 feet in size. For businesses providing mini and self-storage facilities, two 74-foot loading spaces shall be provided to support semi-truck and trailer combinations for loading and unloading purposes.

(Ord. No. 01-16, § 9, 10-1-2001)

Sec. 30-490. - Off-street parking spaces required for disabled persons.

(a) Any business, firm, corporation, person, or other entity, which operates or maintains a building which is used by the public or to which the public has access shall provide specially designed and marked motor vehicle parking spaces for the exclusive use of physically disabled persons, in accordance with the Americans with Disabilities Act (ADA) of 1990. These guidelines are to be applied during the design, construction and alteration of buildings and facilities covered by Titles II and III of the ADA to the extent required by regulations issued by federal agencies, including the Department of Justice and the Department of Transportation under the ADA.

(b) A parking lot servicing any building or entrance pathway to a building shall have a number of level parking spaces, as set forth in the following table, identified by above grade signs, as being reserved for physically disabled persons:

Total Spaces in Lot	Required Number of Reserved Spaces
Up to 25	1
26 to 50	2
51 to 75	3

76 to 100	4
101 to 150	5
151 to 200	6
201 to 300	7
301 to 400	8
401 to 500	9
501 to 1,000	2% of total
1,001 and over	20 plus 1 for each 100 over 1,000

(c) Parking spaces provided for the exclusive use of physically disabled persons serving a particular building shall be located on the shortest accessible route of travel from adjacent parking to an accessible route of travel from adjacent parking to an accessible entrance. In parking facilities that do not serve a particular building, parking shall be located on the shortest accessible pedestrian entrance of the parking facility. In buildings with multiple accessible entrances with adjacent parking, parking spaces shall be dispersed and located closest to the accessible entrances.

(d) All spaces shall have accessibility to a curb ramp or curb cut, when necessary to allow access to the building served, and shall be located so that users will not be compelled to wheel behind parked vehicles.

(e) Diagonal or perpendicular parking spaces shall be a minimum of 12 feet wide by 18 feet long and provide a five-foot wide by 18-foot long passenger loading zone adjacent and parallel to the parking space.

(f) Each such parking space shall be conspicuously outlined in blue paint, and shall be posted and maintained with a permanent, above-grade sign, bearing the internationally accepted wheelchair symbol of accessibility or the caption "PARKING BY DISABLED PERMIT ONLY," or bearing both such symbol and caption. All handicapped parking spaces must be signed and marked in accordance with the standards adopted by the Department of Transportation.

(Ord. No. 01-16, § 10, 10-1-2001)

Sec. 30-491. - Vested projects.

All types of site development plans that have been formally submitted or approved before the effective date of this article, will be exempt, at the election of the applicant, from the new parking requirements of this article as long as commencement of construction occurs on the project within one year of adoption of this article. Furthermore, amendments to previously submitted site development plans may also be exempted, at the election of the applicant, from strict compliance with this article, if the

amendment(s) are considered an insubstantial change per this article. For this subsection, "commencement of construction" means the physical act of constructing or installing on or in the property substantial infrastructure as approved in the final approval of the site development plan. Where this paragraph conflicts with any portion of this article, this paragraph shall prevail.

(Ord. No. 01-16, § 11, 10-1-2001)

Secs. 30-492—30-520. - Reserved.

ARTICLE VI. - SIGNAGE

Sec. 30-521. - Purpose and intent, substitution and severability.

(a) Purpose and intent. It is the purpose and intent of this article to provide specific signage development standards and design regulations to ensure the orderly and appropriate installation, design and construction of individual signs, and to balance desired communication with the interests of the public health, safety, convenience, aesthetics, and general welfare.

It is further the intent of this code that the June 15, 2001, compliance deadline for nonconforming on-premises permanent signs shall not be enlarged, expanded, or stayed except in full compliance with the provisions of this Code.

(b) Substitution of noncommercial speech for commercial speech. Notwithstanding any provisions of this article to the contrary, to the extent that this article permits a sign containing commercial copy, it shall permit a noncommercial sign to the same extent. The noncommercial message may occupy the entire sign area or any portion thereof, and may substitute for or be combined with the commercial message. The sign message may be changed from commercial to noncommercial or from one noncommercial message to another, as frequently as desired by the sign's owner, provided that the sign is not prohibited and the sign continues to comply with all requirements of this article.

(c) Severability.

(1) [Generally.] Generally, if any part, section, subsection, paragraph, subparagraph, sentence, phrase, clause, term, or word of this article is declared unconstitutional by the final and valid judgment or decree of any court of competent jurisdiction, the declaration of unconstitutionality or invalidity shall not affect any other part, section, subsection, paragraph, subparagraph, sentence, phrase, clause, term or word of this article.

(2) Severability where less speech results. This section shall not be interpreted to limit the effect of subsection (c)(1) or any other applicable severability provision in the Code of Ordinances or adopting ordinance. The city council specifically intends that severability shall be applied to these sign regulations even if the result would be to allow less speech, whether by subjecting currently exempt signs to permitting or by some other means.

(3) Severability of provisions pertaining to prohibited signs. This section shall not be interpreted to limit the effect of subsection (c)(1), or any severability provision in the Code of Ordinances or any adopting ordinance. The city council specifically intends that severability shall be applied to section 30-527 concerning prohibited signs so that each of the prohibited sign types listed in that section shall continue to be prohibited irrespective of whether another sign prohibition is declared unconstitutional or invalid.

(4) Severability of prohibition on bill board off-premises signs. This section shall not be interpreted to limit the effect of subsection (c)(1) above, or any other applicable severability provision in the Code of Ordinances or any adopting ordinance. If any or all of article VI signage or other provision of the city's Code of Ordinances is declared unconstitutional or invalid by the final and

valid judgment of competent jurisdiction, the city council specifically intends that the declaration shall not affect the prohibition on bill board off-premises signs contained herein in section 30-527

(Ord. No. 02-11, § 1, 3-18-2002; Ord. No. 07-12, § 1, 1-7-2008)

Sec. 30-522. - Temporary signs.

The following signs do not require a building permit:

(1) Real estate signs. One ground or wall "for sale" or "for rent" sign is permissible for each lot having street frontage pursuant to the criteria listed below. If a lot also has frontage on a navigable water body or a golf course, one such sign shall be permitted on each frontage. It is the intent of this article that "for rent" signs hereinafter erected shall be for the purpose of identifying residential properties offered for long-term occupancy (six months and one day). Signs identifying residential properties offered for short-term occupancy (less than six months) shall not be allowed.

a. Maximum size:

1. Residential single-family: One and one-half square feet.

2. Residential multifamily: Four square feet.

3. Nonresidential: Four square feet.

b. Maximum height: Three feet as measured from finished grade around the base of the sign.

c. Setbacks:

1. Said signs may be placed at the property line of the subject property. Said signs are prohibited within the public right-of-way.

2. In no case shall such sign be located any closer than ten feet to the edge of the pavement of any adjacent public street.

3. Signs may be located either parallel to or perpendicular to the adjacent right-of-way.

d. Copy:

1. "For sale" or "for rent".

2. Name, address, telephone number, picture, email and website address of any of the following:

i. Property owner.

ii. Real estate broker.

iii. Investment company or business firm licensed to sell real estate in the state.

iv. Salesperson.

v. Real estate agent.

3. "Pending" or "sold" may be attached to the face of the sign within the 12-inch × 18-inch sign face until closing has been completed.

4. Signs may be double-faced, provided each sign face contains the same copy. The real estate agent's name is not required to be the same on each side of the sign.

5. No additional riders or information boxes shall be affixed to this sign.

e. Sign supports:

1. Supports shall not exceed two inches by two inches.

2. All supports shall be either white or black.

f. Signs may not be illuminated.

g. Real estate signs shall be removed within seven days after the ownership has changed or the property is no longer for sale or rent.

h. In addition to the real estate sign, one "open house" sign, no larger than four square feet, may be erected on the property where the open house is taking place. Such sign shall be removed at the completion of the open house, and during non-supervised hours.

(2) Open house directional signs. Three right-of-way directional signs are allowed during a supervised open house. Said off-site directional signs shall comply with the standards of subsections (1)a.l. and (1)b. of this section. Off-site directional signs shall be placed at the intersection of any streets providing access to the open house and may only be placed in the right-of-way (along the sidewalk or in the swale) of the intersection of said streets. No other off-site signs shall be permitted. Such sign shall be removed at the completion of the open house, and during nonsupervised hours and no later than 6:00 p.m. or sunset, whichever occurs earlier. No intersection shall contain more than one directional sign for each supervised open house.

(3) Model home and sales center signs (see illustration 3 below): One on-premises sign for a model home or sales center in conjunction with an approved temporary use permit is permitted subject to the following criteria.

a. Maximum size: 16 square feet.

b. Maximum height: Six feet as measured from finished grade around the base of the sign.

c. Setbacks:

1. Said signs may be placed at the property line. Said signs are prohibited within the public right-of-way.

2. In no case shall such sign be located any closer than ten feet to the edge of the pavement of any adjacent public street.

3. Signs may be located either parallel to or perpendicular to the adjacent right-of-way.

d. Color:

1. White background or match the principal color of the model home.

2. Lettering may be any single color.

3. Twenty percent of the sign face may include the display of a logo which may include multiple colors.

e. Copy:

1. Name of the model.

2. Name, address, phone number and logo of the developer/builder.

3. Name, address, phone number and logo of the real estate company/broker, investment company or business firm licensed to sell real estate in the state.

4. Signs may be double-faced, provided each sign face contains the same copy.

5. No additional riders or information boxes shall be affixed to this sign with the exception of a 1.5 square foot "model open" sign which shall be removed during non-open house hours.

f. Construction materials:

1. Signs and any supporting structure shall be constructed of CBS, wood (with raised or engraved letters), stone, metal, or durable opaque plastic. Plywood is not permissible as a finished sign face material.

2. No other signs, including real estate, open house and construction signs, shall be placed on the property on which a model home sign is erected. Incidental signs shall be permitted according to the regulations set forth in section 30-526 of this article. No flags, except one American flag, attached to the home, or upon an appropriate flagpole foundation, are permitted.

g. Model home and sales center signs may not be illuminated in any manner.

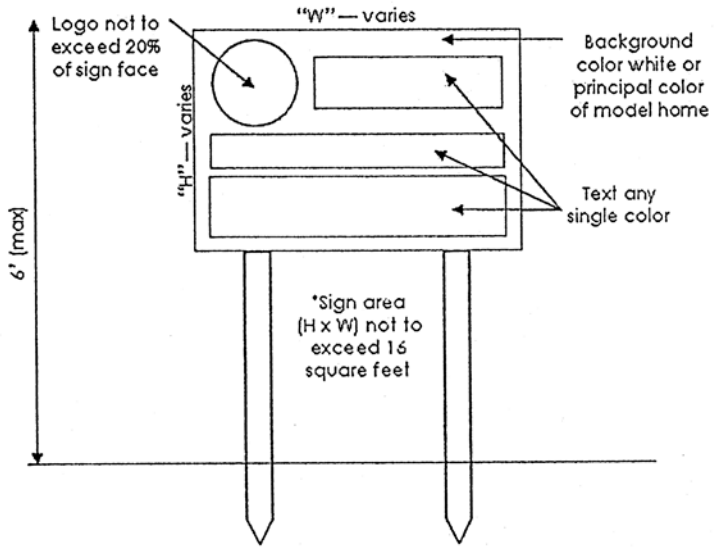

Illustration 3: Model home sign

Illustration 3

(4) Construction/project signs (see illustrations 4—6 below): One construction sign is allowed for each property after either a site development plan has been approved or a building permit has been granted, subject to the following criteria. The construction sign must be removed prior to the issuance of a certificate of occupancy or a certificate of completion.

a. Maximum size:

1. Residential single-family: Six square feet.

2. Residential multifamily: 16 square feet.

3. Nonresidential: 32 square feet.

b. Maximum height: Six feet as measured from average finished ground elevation.

c. Setbacks: Pursuant to subsection (3)c.

d. Color: Pursuant to subsection (3)d.

e. Copy:

1. Name, address and telephone number of the following:

i. Developer and/or leasing agent.

ii. Architectural, planning and engineering firm.

iii. Contractor and/or subcontractor(s) involved with the project.

iv. Name of the individual(s) for whom the dwelling/addition is being constructed.

v. Depiction of project (project sign only).

2. Signs shall be single-faced. The back side of the sign may be utilized as a permit board.

3. No additional riders or information boxes shall be affixed to this sign except tubes or boxes designed to hold construction plans.

f. Construction signs shall not be illuminated in any manner.

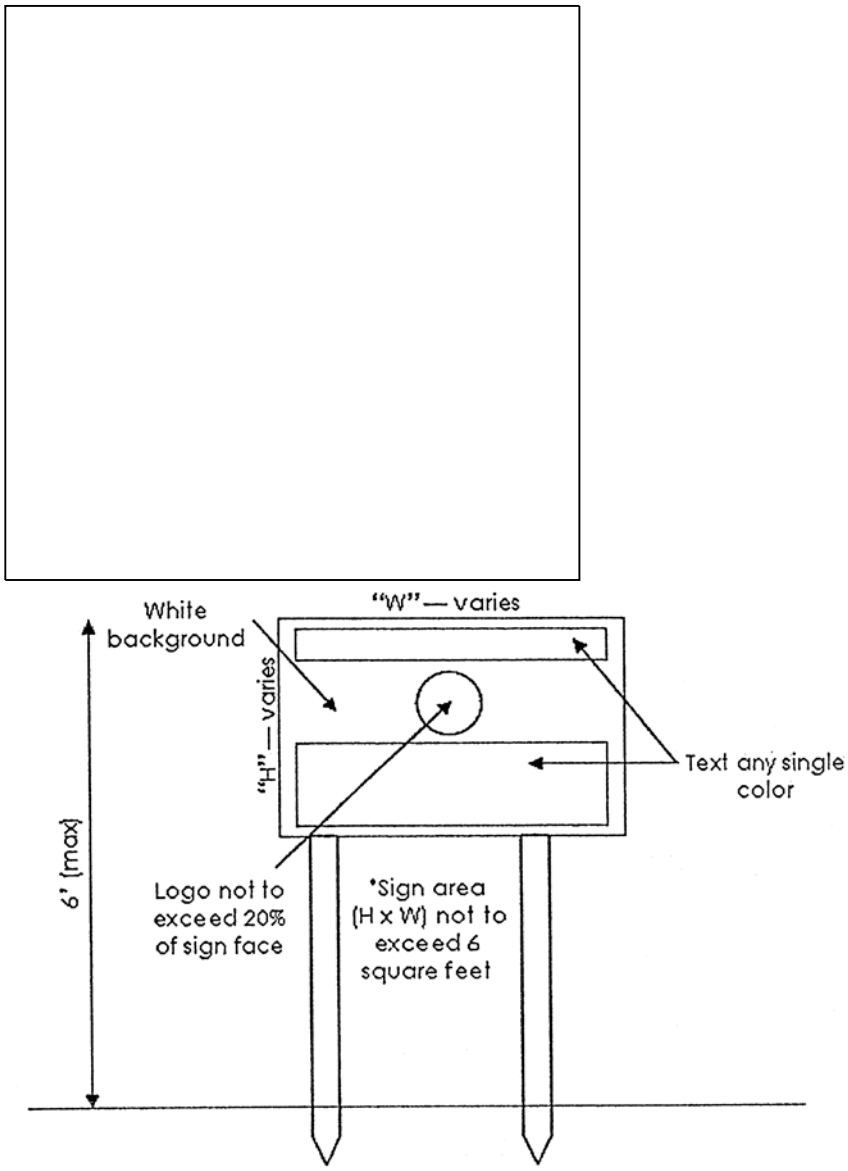

Illustration 4: Single family construction sign

Illustration 4: Single family construction sign

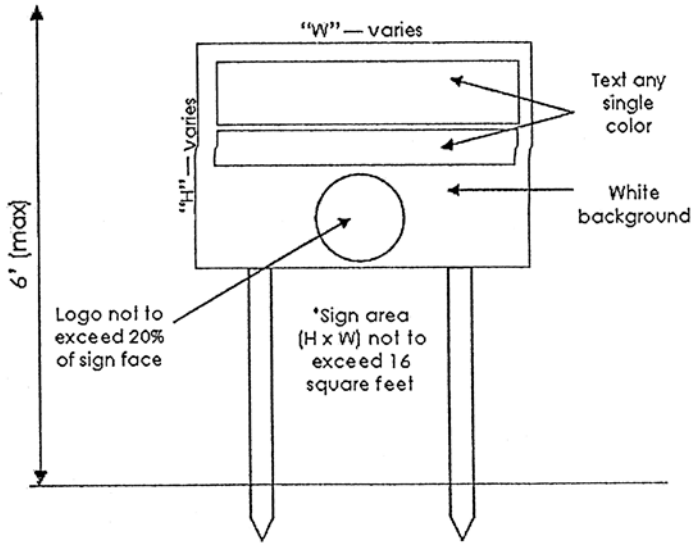

Illustration 5: Multi-family construction/project sign

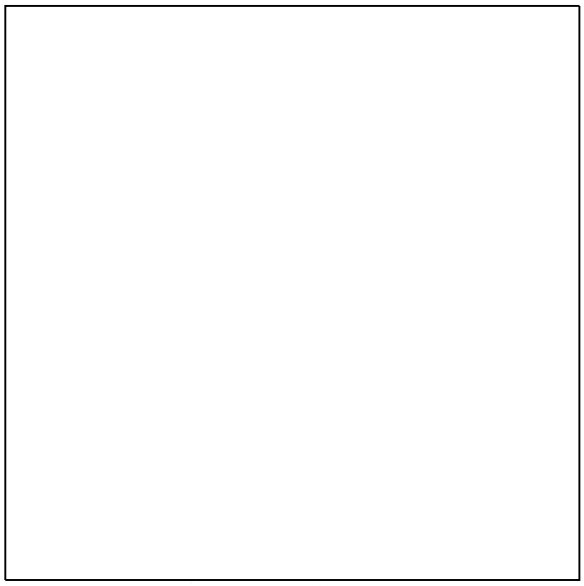

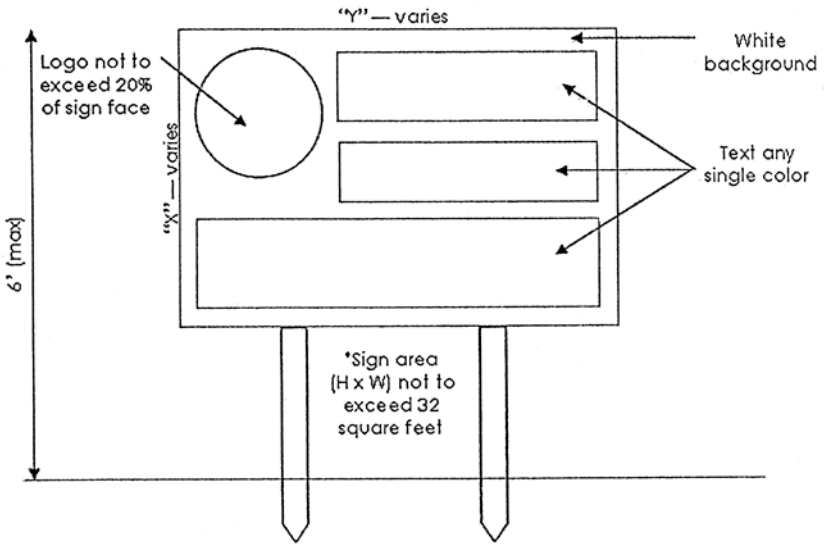

Illustration 6: Non-residential construction/project sign

(5) Garage sale: During a permitted garage, yard, or similar type sale, one on-premises "garage sale" sign no larger than four square feet may be erected. Such sign shall be removed at the completion of the sale. The sign may be placed at the property line, however, in no case shall such sign be located any closer than ten feet to the edge of the pavement of any adjacent public street. Said sign may not be placed within the right-of-way or on any other property.

(6) Political sign: Political campaign signs and posters shall be permitted subject to the following requirements:

a. Prior to the erection, installing, placing, or displaying of a political sign a bulk temporary permit shall be obtained by a candidate.

b. Political campaign signs or posters four square feet or less in size, shall be permitted in all zoning districts. Such signs and posters shall be located a minimum of 18 inches from the upland side of the sidewalk (or the property line if no sidewalk exists) and shall not exceed four feet in height.

c. Larger political campaign signs or posters may be permitted in all non-residential zoning districts including the residential tourist zoning district. Such signs shall have a maximum copy area of 40 square feet per sign, shall be limited to eight feet in height, and shall be located no closer than 15 feet to any property line.

d. The number of political campaign signs or posters shall be limited to one sign for each lot or parcel per bulk permit issued for each candidate or issue. Political signs placed within the city shall require a candidate to obtain written permission from the property owner.

e. All supports shall be securely built, constructed and erected to conform with the requirements of this code.

f. Political signs shall not be erected more than 60 calendar days prior to an election or political event and shall be removed within seven calendar days after the election, event, or after the campaign issue has been decided.

g. Political signs may not be placed on any city right-of-way.

(7) Special event: One on-premises sign or banner, a maximum of 32 square feet, approved in conjunction with a temporary use permit is permitted. Two signs are permitted for properties containing more than one street frontage.

(Ord. No. 02-11, § 2, 3-18-2002; Ord. No. 03-03, 4-7-2003; Ord. No. 07-12, § 1, 1-7-2008; Ord. No. 10-07, § 1, 6-7-2010; Ord. No. 12-13, § 2, 10-1-2012)

Sec. 30-523. - Signs in residential districts.

(a) The following sign does not require a building permit.

(1) Incidental information and directional signs: A maximum of four incidental noncommercial information or directional signs may be erected on residential properties subject to the criteria listed below. Examples of such signs include name or insignia plaques identifying the home or homeowner, "no trespassing" signs, "beware of dog" signs, and other similar types of information signs.

a. Maximum size: 12 inches in height by 18 inches in length.

b. Maximum height: Three feet as measured from average finished ground elevation, or, if attached to a wall or fence, not to exceed the maximum height of said wall or fence.

(b) The following signs do require a building permit.

(1) Conditional uses within residential districts, subject to the following:

a. Approved conditional uses within residential zoned districts are permitted one wall and one ground sign, each not to exceed 32 square feet. Corner lots are permitted two wall signs. Said signs may be illuminated. Signs and any supporting structure shall be constructed of CBS, wood (with raised or engraved letters), stone, metal, or durable opaque plastic. Plywood is not permissible as a finished sign face material.

b. Houses of worship which have been approved as a conditional use within a residential zoned district are also permitted one bulletin board or identification sign to be located on the premises and not to exceed 12 square feet in size. Such sign may also be incorporated within the ground sign which is otherwise allowed.

(2) Subdivision/project signs: At each entrance to a specific subdivision, neighborhood, or multifamily project, two ground or wall entrance or gate signs may be located at each entrance to the project. Such signs shall contain only the name of the subdivision, neighborhood, or project in which it is located, subject to the following:

a. Maximum size: The ground or wall signs, in combination, shall not exceed a maximum size of 64 square feet, with no individual sign exceeding 32 square feet.

b. Maximum height and width: The height of a ground or wall sign shall not exceed the height or width of the wall or gate upon which it is located or eight feet, whichever is most restrictive.

c. Required setback: Said signs shall maintain a 15-foot setback from any property line.

d. Construction materials: Signs and any supporting structure shall be constructed of CBS, wood (with raised or engraved letters), stone, metal, or durable opaque plastic. Plywood is not permissible as a finished sign face material.

(Ord. No. 02-11, § 3, 3-18-2002)

Sec. 30-524. - Signs in commercial districts.

The following signs do require a building permit.

(1) On-premises permanent signs.

a. Freestanding signs (ground, pole and directory):

1. Minimum frontage requirements:

i. Single or multiple tenant buildings located on a parcel having less than 125 linear feet of street frontage are permitted a single ground sign per parcel, with a maximum of 32 square feet of sign face and a maximum of 20 square feet of copy area. Copy is limited to building reference name, street number, and may include up to five tenant names. Each sign face is not required to have identical copy.

ii. Single or multiple tenant buildings located on parcel having 125 linear feet or greater of street frontage are permitted a single ground or pole sign per parcel, with a maximum of 60 square feet of sign face area. Copy shall include building reference name and street number and may include a maximum of five tenant names.

iii. Shopping centers and other multi-tenant buildings having 250 linear feet or greater of street frontage on a single street, or 300 combined linear feet of street are permitted a single "directory sign" per street frontage, not to exceed two such signs. Copy shall include the shopping center or building name and street number and may include the name(s) of two or more persons or businesses associated with, or events conducted upon, or products or services offered upon the premises upon which the sign is located.

iv. Where a site development or site improvement plan has been approved for multiple properties, the minimum frontage shall be determined based on the aggregate frontage of all contiguous parcels which are part of the site improvement or site development plan. In cases where a site development plan is not required, the combination of frontage along two or more adjacent properties for the purpose of sharing signage shall require review by the planning board and approval by the city council.

2. Setbacks:

i. Freestanding signs shall be setback 15 feet from any property line, public or private right-of-way, or easement, unless otherwise reduced pursuant to subsection ii.

ii. The 15-foot setback requirement may be administratively reduced to a minimum of five feet by the community development director upon submission of the administrative variance fee and a written request. As a condition of such approval, the director may require a reduction in sign height and/or size. The community development director's decision to reduce the required 15-foot setback shall be based on the following:

(1) Where due to the existing site conditions and improvements, it can be demonstrated that adherence to the required 15-foot setback will have a deleterious effect on the safety of users of the site from the perspective of vehicular parking and vehicular and pedestrian ingress and egress;

(2) Where due to the nature and location of existing landscape features and/or specimen trees, it would be prudent to allow for a reduction in the required setback so as to most appropriately locate the sign structure; or

(3) The extent of the reduction is the minimum amount necessary to provide relief from the applicable conditions cited above.

3. Architectural embellishments: For the purpose of identifying street address, articulated architectural embellishments may be allowed on any permanent freestanding sign not to exceed 12 inches in height over the top of the sign. Copy shall be limited to street number only.

4. Ground sign: The height of ground signs shall be a minimum of four feet and a maximum of eight feet. The width of ground signs shall be a minimum of four feet and a maximum of eight feet.

5. Pole signs:

i. Pole signs shall not exceed 15 feet in height as measured from the finished grade on the lot on which the sign is located.

ii. Pole signs shall provide a pole cover, width of which shall be a minimum of 20 percent and a maximum of 50 percent of the sign structure and extending from the bottom of the sign structure to the ground, completely covering the supporting pole(s). The height of the pole cover shall be a minimum of five feet.

iii. A minimum two-foot perimeter planting area shall be provided around the base of any pole sign, consistent with the provisions of the land development code. The two-foot perimeter shall be measured from the overall width of sign.

6. Directory signs: The maximum size of any single directory sign shall not exceed 100 square feet. Where two directory signs are permitted, the maximum combined size shall not exceed 120 square feet in area.

b. Awning/wall/canopy signage: A single wall, mansard, canopy or awning sign is permitted for each single occupancy parcel, or for each establishment in a multiple occupancy parcel. Corner buildings or corner units within a building may have one sign on each frontage wall or the unit or building not to exceed two signs.

1. No wall, mansard, canopy or awning sign shall exceed 80 percent of the width of the unit(s) occupied by a business with a minimum of ten percent clear area on each outer edge of the unit(s).

2. Wall signs for a multi-tenant building shall be located at a uniform height on the building facade, for the top and bottom of the sign, except that anchor tenants may vary from this requirement subject to all provisions of this article.

3. Wall, mansard, canopy or awning signs may not exceed 15 percent of the total square footage of the visual facade of the building, in the case of single-use buildings; or the unit, in the case of multi-use buildings, to which the sign will be attached. Each wall

sign shall not exceed 150 square feet in any case. Signage on awnings shall be limited to one visual side only.

c. Under-canopy signage:

1. In addition to any other sign permitted by this code, an under-canopy sign shall be allowed for each business in a multi-occupancy building;

2. Under-canopy signs shall not exceed six square feet for each establishment in a shopping center or multi-tenant building;

3. No building permit is required to erect on under-canopy sign, unless there is an electrical component;

4. Under-canopy signs shall adhere to the common signage theme for the property;

5. Under-canopy signs shall be installed so as to maintain a minimum of eight feet of clear, unobstructed area between the bottom of the sign and the sidewalk below.

d. Projecting signs: Projecting signs may be substituted for wall or mansard signs provided:

1. The projecting sign does not protrude greater than four feet from the building wall to which it is attached;

2. Projecting signs shall not exceed 20 square feet of display area;

3. Projecting signs shall not extend above the roofline of the building to which they are attached; and

4. Projecting signs which may project over any pedestrian way shall be elevated to a minimum height of eight feet above said pedestrian way.

e. Special purpose signs:

1. Automobile service station: In addition to the signs otherwise permitted by this Code, automobile service stations shall be permitted one reader board sign not to exceed ten square feet in area for the purpose of displaying gasoline prices only. Such sign shall be affixed to the structure of a pole on the property or incorporated within the ground or pole sign which is otherwise allowed.

2. Movie theater: In addition to the signs otherwise permitted by this Code, a theater shall be permitted a reader board sign, the surface of which shall not exceed 100 square feet in area.

3. Reader board signs: Reader board signs as a component of signage will be permitted at business establishments, religious and educational or civic organizations provided:

i. The reader board is a part of the total square footage allowable for a sign, not to exceed 20 percent of the sign's total square footage. Existing, legally permitted reader boards that are greater than the 20 percent standard at the time of adoption of this section, shall be allowed until such time that a permit is taken out or required to replace or physically modify the structural components of the sign.

ii. Internally or externally illuminated reader board signs will comply with the sign face illumination standards set forth in the illumination design and methods section of this chapter.

iii. Internally illuminated reader boards will have an opaque border background, not to exceed the allowable standard set forth in the illumination design and methods section of this chapter.

iv. The interchangeable letter sets or panels of a reader board shall be displayed as "reverse copy", where the background of the interchangeable letter sets or panels are opaque and of a similar color as the border, and the text is

translucent. Opaque blanks will be used in the spaces between words so that only the text is translucent.

v. Externally illuminated and nonilluminated reader boards will be required to contain "reverse copy".

vi. Reader board signs at automobile service stations and theaters will comply with the illumination and reverse copy standards set forth in this section.

vii. Existing permitted signage that does not conform to the reader board sign standards at the time of adoption of this section, will not have to comply with the requirements of this section unless that sign or sign face is voluntarily altered, replaced, repaired or relocated.

f. Construction standards:

1. Signs and any supporting structure shall be constructed of CBS, wood (with raised or engraved letters), stone, metal, or durable opaque plastic. Plywood is not permissible as a finished sign face material.

2. Illumination design and methods:

i. Signs lighting shall be designed in such a fashion so as not to cause confusion with traffic control devices, and not to shine directly onto adjoining properties or public rights-of-way.

ii. External fixtures for lighting sources shall be designed to avoid excessive brightness and positioned so that minimal light spills over the edge of the sign face. Externally illuminated signs shall not emit more than ten foot-candles of light when measured at night, five feet perpendicular from the center of the sign.

iii. Lighted signs shall be shielded in such a manner as to produce no glare, hazard or nuisance to motorists or occupants of adjacent properties. No lighted sign shall be reflective, phosphorescent, fluctuating or undulating.

iv. Internally illuminated, translucent signs shall not emit more than ten foot-candles of light when measured at night, five feet perpendicular from the center of the sign. The opaque background of the sign face will not emit more than two foot-candles of light when measured at night, with the light meter placed directly against the sign face, positioned on the background area only.

v. Existing signage that does not conform to the illumination standards at the time of adoption of this section, shall have three years from the date of adoption of this section to comply with the illumination requirements of this section. If a nonconforming sign or sign face is voluntarily altered, replaced, repaired or relocated prior to the required date of compliance, the sign must come into conformance at that time.

vi. Owners and/or lessees which have signs that exceed either the two- or the ten foot-candle maximums for illumination have the option of applying for an administrative variance from the community development director. In no case shall the administrative variance relief granted exceed ten percent of the allowable foot-candle standards. Further, such administrative variance relief shall be allowed under one of the following circumstances:

(a) Where due to the nature and location of existing landscaping features and/or specimen trees, it would be prudent to allow for an increase in the maximum illumination; or

(b) Where the sign owner has demonstrated a good-faith effort to obtain compliance, but due to factors inherent to the sign components and/or

materials, full compliance cannot be achieved without substantial additional costs; or

(c) Where the signage in question is part of an approved unified sign plan, whereby the intended uniformity or harmony of the sign plan cannot be achieved without variance relief to the maximum illumination standards; or

(d) In cases where such variance relief to the maximum illumination standard(s) will not create on- or off-site impacts to pedestrians or to vehicular traffic.

g. Permits required for commercial signs: A sign permit is required to erect, reinstall, alter or replace the sign face, repair or relocate a sign within the city limits. In addition, a sign permit is required for the use of banners, pennants, balloons and portable signs.

h. Graphics or logos: Twenty percent of the sign face may include the display of a company graphic or logo which may include multiple colors.

1. On internally illuminated signs, graphics or logos may be translucent but still must conform to the illumination standards set forth in this section.

(2) Old Marco Overlay. In the Old Marco Overlay there are locational constraints and community character issues that warrant relief from strict adherence to the commercial signage standards contained in section 30-524. The following standards are applicable to this district only:

a. Ground signs for commercial enterprises located on existing nonconforming lots of record may be setback 1.5 feet from the property line, provided such signs are constructed of wood with engraved lettering. Such signs may be illuminated with external lights, but only during business hours of operation.

b. Off-premises signs. Off-premises ground signs may be permitted through a right-of-way permit subject to the following criteria:

1. Such signs shall only be constructed of wood with raised or engraved letters.

2. For signs which serve two or more businesses, copy area may not exceed 28 square feet.

(3) Marco Lake Business District Overlay. In the Marco Lake Business District Overlay there are locational constraints that warrant relief for strict adherence to the commercial signage standards contained in section 30-524. The following standards are applicable to this district only:

a. In conjunction with an executed shared parking agreement, up to three off-premises informational signs may be located within the area of shared parking. Such signs shall be limited to 12 inches in width by 18 inches in height and may not contain specific advertising for a business (e.g., restaurant parking).

b. Off-premises signs. The city council, after consideration by the planning board, may approve off-premises ground directory signs, subject to the following criteria.

1. Such signs shall only be constructed of wood with raised or engraved letters.

2. For directory signs which serve five or more businesses, copy area may not exceed 64 square feet.

3. For directory signs which serve less than five businesses, copy area may not exceed 32 square feet.

(Ord. No. 02-11, § 4, 3-18-2002; Ord. No. 03-03, 4-7-2003; Ord. No. 04-22, § 1, 12-6-2004)

Sec. 30-525. - Unified sign plan.

Where multiple on-premises signs are proposed for a single site or project, or in the case of a shopping center or multi-use building, a unified signage plan shall be employed. Applications for site development or site improvement plan approval shall be accompanied by a graphic and narrative representation of the unified signage plan to be utilized on the site. Existing commercial buildings and projects shall submit a unified sign plan to the City of Marco Island before January 1, 2004. Building permits for new signs shall not be issued at such commercial buildings which have not submitted a unified sign plan after December 31, 2003. The unified sign plan may be amended and resubmitted for approval to reflect style changes or changing tenant needs. Design elements which shall be addressed in both graphic and narrative form include:

(1) Adherence with the provisions of this article.

(2) Colors.

(3) Construction materials and method.

(4) Architectural design.

(5) Illumination method.

(6) Copy style.

(7) Sign type(s) and location(s).

(8) In the case of multi-use buildings, and parcels with multiple structures on site, including outparcels, the unified sign plan shall indicate conformance with the following:

a. No wall sign shall exceed 80 percent of the width of the unit(s) occupied by a business with a minimum of ten percent clear area on each outer edge of the unit(s).

b. All wall signs for multi-use buildings shall be located at a consistent location on the building facade, except that anchor tenants may vary from this locational requirement in scale with the anchor's larger primary facade dimensions. All signs shall adhere to the dimensions provided for in this unified signage plan; and

c. Pole signs shall provide a pole cover with architectural design features, including colors and/or materials common to those used in the design of the building the sign is accessory to. A minimum 100 square foot planting area shall be provided around the base of any ground or pole sign, consistent with the provisions of this article.

(9) Outparcels. In addition to the above requirements, unified sign plans for outparcels, regardless of the size of the out parcel, shall be limited to the following:

a. A wall sign for any facade adjacent to a public right-of-way and a wall sign for any facade facing the main commercial center, not to exceed a maximum of two wall signs for any single use.

b. A single ground or pole sign not to exceed 60 square feet. Pole signs shall be limited to 15 feet in height.

(10) Requests for building permits for permanent on-premises signs shall adhere to the unified signage plan, which shall be kept on file in the community development department. Request to permit a new sign, or to relocate, replace or structurally alter an existing sign shall be accompanied by a unified sign plan for the building or project the sign is accessory to. Existing permitted signs may remain in place; however, all future requests for permits, whether for a new sign, or relocation, alteration, or replacement of an existing sign shall adhere to the unified sign plan for the property.

(Ord. No. 02-11, § 5, 3-18-2002)

Sec. 30-526. - Signs exempt from permitting.

In addition to those signs identified elsewhere is this code, the following signs are exempt from the permit requirements of this code, and shall be permitted in all districts subject to the limitations set forth below:

(1) On-premises directional signs, not exceeding four square feet in area, intended to facilitate the movement of pedestrians and vehicles within the site upon which such signs are posted.

(2) Holiday; seasonal, or commemorative decorations provided that such signs display no commercial advertising and provide that such signs are not displayed for a period of more than 60 days.

(3) One identification sign, professional nameplate, or occupational sign for each professional office, or business establishment not to exceed two square feet in sign area and placed flush against a building face or mailbox side, and denoting only the name of the occupant and, at the occupant's election, the occupant's professional [professionally] or specialty and/or the street address of the premises.

(4) Memorial plagues, cornerstones, historical tablets, and similar types of commemorative signs when cut into any masonry surface or when constructed of bronze or other noncombustible materials.

(5) Window merchandise displays which are changed on a regular basis, meaning no less frequently than every 30 days.

(6) Window signs not exceeding 20 percent of the total window area or 50 square feet, whichever is more restrictive.

(7) Altering interchangeable letter sets or panels for reader board signs that are specifically designed for changes of interchangeable letter sets or sign panels.

(8) Painting, repainting or cleaning of an advertising structure, or changes which are determined to be less than a substantial improvement.

(9) Religious displays that do not constitute advertising.

(10) Flags, or insignias of governmental, religious, charitable, fraternal or other nonprofit organizations when displayed on property owned by or leased to said organization. Noncommercial flags that will be flown on a flagpole that does not exceed 15 feet in height above finish grade or extend more than ten feet from any building they are attached to, are allowable if the number of flags displayed does not exceed those described in the land development code and the flagpoles do not require a certified design or be sealed by a state registered engineer as described in the land development code.

(11) One house (commercial) flag may be displayed on any developed commercial lot regardless of parcel size, provided:

a. The American flag shall also be flown at the establishment on a separate flagpole; and

b. The house flag be no larger than the American flag or larger than four feet by six feet, whichever is smaller.

c. Developed commercial lots that have water frontage may fly one additional house flag on the waterfront side of the lot.

d. Any attempt to use the house (commercial) flag to convey or advertise merchandise, services or entertainment provided by, or at, the business establishment is prohibited.

(12) Advertising and identifying signs located on taxicabs, buses, trailers, trucks, or vehicle bumpers, provided such sign does not violate the land development code.

(13) Signs required to be maintained or posted by law or governmental order, rule, or regulation.

(14) Traffic control and safety signs or other municipal, county, state or federal signs, legal notices, railroad crossing signs, danger signs and such temporary emergency signs when erected by an appropriate authority.

(Ord. No. 02-11, § 6, 3-18-2002; Ord. No. 04-22, § 2, 12-6-2004)

Sec. 30-527. - Prohibited signs.

It shall be unlawful to erect, cause to be erected, maintain or cause to be maintained, any sign not expressly authorized by, or exempted from this code. The following signs are expressly prohibited:

(1) Signs which are in violation of the building code or electrical code adopted by the city.

(2) Animated or activated signs, except time and temperature signs.

(3) Flashing signs. Electronic reader boards that do not flash on and off are not flashing signs.

(4) Rotating signs.

(5) Illuminated signs in any residentially zoned district, except residential identification signs, residential nameplates, and street signs that are illuminated by soft or muted light. Nonresidential uses within residentially used or zoned district by provisional use, PUD ordinance, or as otherwise provided for within the zoning ordinance, shall be allowed the use of illuminated signs, subject to the approval of the community services administrator or his designee.

(6) Signs located upon, within, or otherwise encroaching upon public rights-of-way, except as may be permitted and erected by a governmental agency or rehired to be erected by a governmental agency.

(7) Billboards.

(8) Strip lighted signs.

(9) Neon type business identification signs, except non-exposed neon signs covered with an opaque or translucent shield which will prevent radiation of direct light, within all commercial and industrial districts. Businesses with existing neon type signs at the date of adoption of this article may remain as a legal non-conforming sign.

(10) Roof signs.

(11) Portable signs.

(12) Signs which resemble any official sign or marker erected by any governmental agency, or which by reason of position, shade or color, would conflict with the proper function of any traffic sign or signal, or be of a size, location, movement, content, color, or illumination which may be reasonably confused with or construed as, or conceal, a traffic control device.

(13) Signs, commonly referred to as snipe signs, made of any material whatsoever and attached in any way to a utility pole, tree, fence post, stake, stick or any other object located or situated on public or private property, except as otherwise expressly allowed by, or exempted from this code.

(14) Wind signs and tethered inflatable signs.

(15) Any description or representation, in whatever form, of nudity, sexual conduct, or sexual excitement, when it:

a. Is patently offensive to contemporary standards in the adult community as a whole with respect to what is suitable sexual material for minors; and

b. Taken as a whole, lacks serious literary, artistic, political, or scientific value.

(16) Any sign which:

a. Emits audible sound, vapor, smoke, or gaseous matter.

b. Obstructs, conceals, hides, or otherwise obscures from view any official traffic or government sign, signal, or device.

c. Employs motion, have visible moving parts, or gives the illusion of motion (excluding time and temperature signs).

d. Is erected or maintained so as to obstruct any firefighting equipment, window, door, or opening used as a means of ingress or egress for fire escape purposes including any opening required for proper light and ventilation.

e. Constitutes a traffic hazard, or detriment to traffic safety by reason of its size, location, movement, content, coloring, or method of illumination, or by obstructing or distracting the vision of drivers or pedestrians.

(17) Signs mounted on a vehicle, be it the roof, hood, trunk, bed, and so on, where said sign is intended to attract or may distract the attention of motorists for the purpose of advertising a business, product, service, or the like, whether or not said vehicle is parked, or driven, excluding emergency vehicles, taxi cabs, and delivery vehicles, where a roof mounted sign does not exceed two square feet. This section shall not apply to magnetic type signs affixed to or signs painted on a vehicle, which are not otherwise prohibited by this code.

(18) Uses flashing or revolving lights, or contains the words "stop," "look," "danger," or any other words, phrase, symbol, or character in such a manner as to interfere with, mislead, or confuse vehicular traffic.

(19) Abandoned signs, including any sign which advertises or publicizes an activity not conducted on the premises upon which the sign is maintained.

(20) No sign shall be placed or permitted as a principal use on any property, in any zoning district except as follows: Political signs or signs approved by temporary permit pursuant to the time limitations set forth herein.

(21) Accent lighting as defined in this code, outlining doors and windows, or attached to columns and vertical corners of structures.

(22) Accent lighting on walls of commercial buildings that abut residentially zoned parcels.

(Ord. No. 02-11, § 7, 3-18-2002)

Sec. 30-528. - Definitions.

[The following words, terms and phrases, when used in this article, shall have the meanings ascribed to them in this section, except where the context clearly indicates a different meaning:]

Background (sign face background). The background of a sign face is the area of that sign face which is void of copy or graphics. For internally illuminated signs, this area cannot exceed two foot-candles of illumination when the measuring device is placed on the face of the sign, in the background area away from any copy or graphic.

Bulk permit (signs). A permit issued for any number of political signs.

Changeable copy. Interchangeable letter sets which a can be either placed manually in channels to form messages, or copy which can be changed electronically.

Copy. Any text to be included in an advertisement.

Excessive brightness. Standard applicable for any externally or internally illuminated sign that emits more than ten foot-candles of light when measured at night, five feet perpendicular from the center of any sign face.

Graphic. An item to be displayed in a sign that is not copy (text); includes photographs and illustrations such as company logos.

House (commercial) flag. A cloth flag displayed with the intent of conveying a business identification by name, corporate symbol, or registered trademark only.

Interchangeable letter sets. Single letters, numbers or symbol sets placed on rectangles of material (usually plastic) which can be inserted into channels in sign faces such as for reader boards. All interchangeable letter sets on illuminated reader board signs will have opaque backgrounds and translucent text. All interchangeable letter sets on nonilluminated reader board signs will also have reverse copy letter sets. The sign face background color will closely match the background color of the letter sets.

Opacity of backgrounds. Standard applicable for any opaque background on a internally illuminated sign that emits more than two foot-candles of light when measured at the surface of the sign face in the background area only.

Panels. Changeable plastic or metal inserts that can be placed into channels in sign faces such as reader board or directory signs. Panels usually contain messages or business names and fill the whole channel of a sign. Panels on illuminated reader boards will have opaque backgrounds and translucent text. Panels on nonilluminated reader boards will also have reverse copy letter sets. The sign face background color will closely match the background color of the letter sets.

Reverse copy. A type of copy design where the text is white or light colored and the background is black or of a darker color than the text. Reader board signs must contain reverse copy letter sets on both illuminated and nonilluminated signs.

Sign. Any structure, device, vehicle, advertisement, advertising device or visual representation intended to advertise, identify, or communicate information to attract the attention of the public for any purpose and without prejudice to the generality of the foregoing, and includes any symbols, letters, figures, illustrations, or forms painted or otherwise affixed to attract the attention of the public for any purpose and also any structure or device the primary purpose of which is to border, illuminate, animate or project a visual representation. However, this definition shall not be held to include official notices issued by any court or public office, or officer in the performance of a public or official duty, and traffic control signs. For the purpose of removal, signs shall also include all sign structures.

Sign, abandoned. Any sign or sign structure expressly installed for the purpose of affixing a sign which bears no sign or copy for 90 consecutive days or more; or for a period of 90 consecutive days or more, displays information which incorrectly identifies the business, owner, lessor, or principal activity conducted on the site; or which, through lack of maintenance, becomes illegible or nearly so; or is in a state of disrepair. Signs displaying an "available for lease" or similar message or partially obliterated faces which do not identify a particular product, service, or facility, shall be deemed abandoned.

Sign, activated. Any sign which contains or uses for illumination any light, lighting device, or lights which change color, flash, or alternate; or change appearance of said sign or any part thereof automatically; any sign which contains moving parts as part of its normal operation, such as rotating signs, shall be considered an activated sign.

Sign, animated. Any sign which includes action, motion, or the optical illusion of action or motion, or color changes of all or any part of the sign facing, requiring electrical energy, or set in motion by movement of the atmosphere.

Sign area. The area of a sign is the entire area within the periphery of a regular geometric form or combination of regular geometric forms comprising all of the display area of the sign and including all of the elements of the matter displayed. The sign area shall include the aggregate sign area upon which copy is placed and all parts of the sign structure that bear advertising matter or are constructed in such a

manner as to draw attention to the matter advertised. Signs consisting of detached letters shall also be measured as defined above.

Sign, awning (a/k/a canopy sign or marquee sign). A sign suspended from or forming part of a shelter supported partially or entirely for the exterior wall of a building or structure.

Sign, banner. A temporary sign such as used to announce open houses, grand openings or special announcements.

Sign, billboard. Any sign structure advertising an establishment, merchandise, service, or entertainment which is not sold, produced, manufactured, or furnished at the property on which the sign is located.

Sign, bulletin board. A board for posting notices such as those found at a school, church, or other civic organization. (This is a type of reader board sign).

Sign, canopy. See awning sign.

Sign, construction. A temporary sign placed in advance of issuance of a certificate of occupancy of a building or structure indicating the name of the building or structure, the architects, the contractors, and other similar information regarding the building or structure. Construction signs may not contain any promotional or sales material.

Sign, directional. An on-premises sign giving direction, instructions, or facility information such as parking or entrance or exit signs, and which may contain the name, logo, service or activity of an establishment.

Sign, directory. An on-premises sign of permanent character indicating the name of five or more independent businesses associated with, or events conducted upon, or products or services offered upon the premises upon which such sign is maintained. This sign may be a freestanding (pole, monument or ground), awning, or wall sign as otherwise permitted by this Code.

Sign, double-faced. A sign having two display surfaces, not necessarily displaying the same copy, which are parallel and back-to-back and not more than 24 inches apart. Double-faced signs shall be measured by only one side if both sides are advertising the same business, commodity, or service.

Sign, electric. Any sign containing electric wiring, but not including signs illuminated by exterior light sources, such as floodlights.

Sign, entrance or gate (a/k/a subdivision sign). Any community entry sign which is designed to identify a subdivision or neighborhood, including but not limited to industrial and commercial parks, multifamily projects, and single-family residential development.

Sign face. The area comprising the display surface upon which the copy and/or graphic is placed for advertisement.

Sign, flashing. A flashing sign is an activated sign on which any electric lighting by any device is either alternated on and off or raised and lowered in brightness or intensity.

Sign, freestanding. See ground, pole or directory sign.

Sign, ground (a/k/a monument sign). Any sign other than a pole sign which is placed upon or supported by structures or supports in or upon the ground and independent of support from any building so that the top edge of the sign face is less than eight feet above grade.

Sign, identification. A sign which contains no advertising but is limited to the name, address, and number of a building, institution, or person and the activity carried on in the building, institution or the occupation of the person.

Sign, illuminated. An illuminated sign is one which either: (a) provides artificial light through exposed bulbs, lamps, or luminous tubes on the sign surface; (b) emits light through transparent or translucent material from a source within the sign; or (c) reflects light from a source intentionally directed upon it.

Sign, inflatable. Any object made of plastic, vinyl, or other similar material that, when inflated with gas or air, represents, advertises, or otherwise draws attention to a product, service, or activity.

Sign, mansard. Any sign which is attached to a mansard-style roof with the face parallel to the structure to which it is attached and which does not project more than 18 inches from such structure, or above the roofline. Mansard signs shall be considered wall signs.

Sign, marquee. See awning sign.

Sign, monument. A detached sign typically containing design elements such as a base, columns, borders, toppers or caps, and a sign cabinet occupying at least two-thirds of the total sign area.

Sign, nonconforming. Any sign or advertising structure lawfully in existence within the city on the effective date of this Code, which by its height, area, location, use or structural support does not conform to the requirements of this Code. This definition shall not be construed to include signs specifically prohibited by this Code.

Sign, on-premises. A sign containing copy and/or graphics relating only to the principal legally licensed business, project, service or activity conducted or sold on the same premises as that on which the sign is located.

Sign, open house directional. A sign displaying direction to a residential open house. Residential open house directional signs shall comply with subsection 30-522(2) of this Code.

Sign, permanent. A sign which is affixed to a building or the ground in such a manner as to be immobile.

Sign, pole. A sign, independent of support from any building, that is mounted on freestanding poles or other supports.

Sign, political. Any sign which states the name and/or picture of an individual seeking election, or appointment to a public office, or pertaining to a forthcoming public election, or referendum pertaining to or advocating political views of [or] policies.

Sign, portable. Any sign which is designed to be transported, including by trailer or on its own wheels, even though the wheels of such signs may be removed and the remaining chassis or support constructed without wheels is converted to an A or T frame sign, or attached temporarily or permanently to the ground since this characteristic is based on the design of such sign. It is characteristic of such a portable sign that the space provided for advertising matter consists of a changeable copy sign.

Sign, projecting. Any sign which is attached to, and which projects more than 18 inches from the outside wall of any building or structure, excluding wall, marquee, and canopy signs.

Sign, reader boards. A sign where interchangeable letter sets or panels can be either placed manually in channels to form messages, or in the case of an LED display, changeable lit messages are displayed. Lighted LED or electronic marquees, combination panels, led signs, changeable signs, changeable message boards, bulletin boards and status display boards are all forms of reader boards.

Sign, real estate. A sign which advertises the sale, lease, rental, or development of the property upon which it is located.

Sign, residential identification. A sign intended to identify a residential subdivision or other development.

Sign, revolving (a/k/a rotating sign). Any sign so erected or constructed as to periodically or continuously change the direction toward which any plane containing the display surface area is oriented.

Sign, roof. Any sign erected, constructed, or maintained either on the roof, or more than 18 inches above the roof of any building.

Sign, safety. A sign used only for the purpose of identifying and warning of danger, or potential hazards.

Sign, snipe. A sign made of any material and attached to a utility pole, tree, fence post, stake, stick, mailbox or any similar object.

Sign, special purpose. Directional, safety, and other signs of a noncommercial nature.

Sign structure. Any structure which supports or is capable of supporting any sign. Said definition shall not include a building to which a sign is attached.

Sign, temporary. A sign intended to advertise community or civic projects, construction projects, or other special events on a temporary basis, for a designated period of time.

Sign, V-shaped. Two single-face freestanding signs that are constructed in the form of a "V" when viewed from above, provided the internal angle at the apex is not more than 90 degrees, and the two faces are not separated by more than six inches at the apex.

Sign, vehicle. Any sign affixed to a vehicle other than a license plate, or other identification required for access to restricted parking areas, a registered logo, trademark, or service mark.

Sign, wall, fascia or parapet. A sign affixed in a manner to any exterior wall of a building or structure, and which is parallel to and projects not more than 18 inches from the building or structure wall, and which does not extend more than 18 inches above the roof line of the main building or from the point where the roof line intersects the parapet wall on which the sign is located, whichever is more restrictive.

Sign, wind. Any sign or display including, but not limited to, flags, balloons, banners, streamers and rotating devices, fastened in such a manner to move upon being subject to pressure by wind or breeze, but shall not include official flags, emblems, insignia or pennants of any religious, educational, national, state, or political subdivision.

Sign, window. A window sign which is painted on, attached to, or visible through a window, excluding displays of merchandise, and shall not exceed restricted amount of the total window area in the same vertical plane at the same floor level on the side of the building or unit upon which the signs are displayed.

Strip lighting. A continuous series of linear exterior lights designed to illuminate a sign or a structure.

Substantial improvement. Any repair, reconstruction, or improvement of a sign, the estimated cost of which equals or exceeds 50 percent of the market value of current replacement cost of the sign, whichever is lower, either [sic] before the improvement.

(Ord. No. 02-11, § 8, 3-18-2002; Ord. No. 04-22, § 3, 12-6-2004; Ord. No. 07-12, § 1, 1-7-2008)

Secs. 30-529—30-570. - Reserved.

ARTICLE VII. - SUBDIVISION STANDARDS

Sec. 30-571. - Intent and purpose.

It is the intent of this article to provide for minimum standards regulating subdivisions. Such standards are necessary for the protection of the health, safety and general welfare of the citizens of the city. It is further the purpose of this article to ensure that future subdivision activities conform with, and comply with all applicable codes and ordinances, including the comprehensive plan, of the city.

(Ord. No. 02-14, § 1, 3-4-2002)

Sec. 30-572. - Definitions.

The following words, terms and phrases, when used in this article, shall have the meanings ascribed to them as set forth in this section, except where the context clearly indicates a different meaning:

Alley means a roadway dedicated to public use which affords only a secondary means of access to abutting property and is not intended for general traffic circulation.

Arterial street means a street that provides a high degree of mobility. Arterials connect major developments such as business districts, commercial centers, and residential communities. The average daily two-way trip generation rate exceeds 4,000 vehicle trips per day.

Collector street means a street that provides land access and public or private movement within residential, commercial and industrial areas. Collectors penetrate, but should not have continuity through, residential areas. Operating speeds and volumes are low. The average daily two-way trip generation rate ranges from 2,000 to 4,000 vehicle trips per day.

Local street means a street that provides land access, and can be local residential streets, local downtown streets, and local commercial/industrial streets. Local streets involve traveling to and from collector facilities. Trip lengths are short, volumes are low and speeds are low. The average daily two-way trip generation rate ranges from zero to 2,000 vehicle trips per day.

Private road means an approved road owned and maintained by the abutting property owners, and recorded on the final subdivision plat or other public records.

Subdivision means the division of a parcel of land into three or more parcels of land, for the purpose, whether immediate or future, of transferring ownership, or, if the establishment of a new street is involved, any division of a parcel of land. The term "subdivision" includes a resubdivision, and, when appropriate to the context, shall relate to the process of subdividing or to the land subdivided.

Vehicular access easement, under limited circumstances, means a strip of land by which safe ingress/egress can be accommodated over and across residential zoned property(ies) to provide vehicular access to up to four residentially zoned lots. Said vehicular access easement shall meet minimum standards of the city, and shall include appropriate pavement improvements for motor vehicle use, or a financial guarantee of completion posted with the city, prior to the issuance of any building permits for the lots served by the access easement. Said easement shall be recorded in the public records upon administrative review and approval by city staff.

Circumstances under which a vehicular access easement may be appropriate:

(1) To serve lots of record that were originally platted with street frontage, but due to the Deltona Settlement Agreement, the street providing access cannot be constructed.

(2) Where due to environmental constraints (e.g., wetlands, habitats, etc.) a vehicular access easement would be less impactive then a new public or private street.

(Ord. No. 02-14, § 2, 3-4-2002)

Sec. 30-573. - General requirements.

(a) It shall be unlawful for any person to create a subdivision of, or to subdivide, or to otherwise divide, any land in the city, except in strict conformance with the provisions of this article and any applicable provisions of the comprehensive plan and the land development code.

(b) No land shall be divided or subdivided, nor shall any subdivision occur or be created, platted, recorded or left unrecorded, nor shall any building permit for any structure to be constructed upon any land so subdivided be issued, unless such subdivision meets all of the provisions of this article, the land development code, and all of the provisions of any applicable federal, state and local laws, including the comprehensive plan.

(c) It shall be unlawful for any person to transfer, sell, or otherwise convey, to sell any land by reference to, exhibition of, or other use of, a plat of a subdivision of such land without having submitted a final

subdivision plat of such land for approval to city council as required by this article and without having recorded the approved final subdivision plat as required in this article.

(d) No approval of the final subdivision plat, improvement plans or authorization to proceed with construction activities in compliance with the same shall require the city to issue a development order or building permit if:

(1) It can be shown that issuance of said development order or building permit will result in a reduction in the level of service for any public facility below the level of service established in the city comprehensive plan; or

(2) Issuance of said development order or building permit is inconsistent with the comprehensive plan.

Notwithstanding the provisions of this article, all subdivision and development shall comply with city ordinances regarding adequate public facilities.

(Ord. No. 02-14, § 3, 3-4-2002)

Sec. 30-574. - Exemptions.

The following shall be considered exempt from the subdivision procedures as outlined in this article. However, such exemptions shall be reviewed and stamped "exempt" by the community development department prior to recordation of any documents related to the exempt subdivision.

(1) The creation of two lots from one recorded lot of record if said lots created meet or exceed the minimum dimensional standards of the underlying zoning district, and all resultant lots have direct access to an existing public or private street. New lots created under this exemption shall be recorded and no further division allowed for a period of five years.

(2) The combination or recombination of entire lots of record where no new streets or change in existing streets is involved.

(3) The division of land into parcels of five acres or more where no new street(s) are involved.

(4) The combination or recombination of portions of previously platted lots where the total number of lots is not increased and the resultant lots meet or exceed the minimum dimensional standards of the underlying zoning district.

(5) The division of land within an existing cemetery for plots or lots.

(6) The division of land created by any court in this state pursuant to the law of eminent domain, or by operation of law, or by order of any court.

(7) The division of land which creates an interest or interests in oil, gas, or minerals which are now or hereafter severed from the surface ownership of real property.

(Ord. No. 02-14, § 4, 3-4-2002)

Sec. 30-575. - Approval procedure for subdivision plats.

(a) Preapplication.

Step No. 1. Prior to filing application for approval of a preliminary subdivision plat, the subdivider or his agent shall obtain from the community development department a list of data and requirements to be included in the preliminary plat, together with the overall plat approval procedure.

(b) Application for preliminary plan approval.

Step No. 2. The subdivider or his agent shall prepare a preliminary plat of the proposed subdivision in accordance with requirements contained in section 30-576 and shall submit an application for preliminary plat approval to the community development department together with 20 copies of the preliminary plat. If a zoning change is required, the applicant shall submit a rezone petition simultaneously with the application for preliminary plat approval. The department shall review the preliminary plat, and, if it determines the plat to be in order, a notice of public hearing before the planning board shall be advertised in a newspaper of general circulation in the city at least 15 days prior to the public hearing, setting forth the date, time and place of the public hearing. The community development department shall notify owners of property located within 300 feet of the property involved in the petition, informing them of the date, time, place and reason for the public hearing.

Step No. 3. At the public hearing, the planning board shall hear the petitioner or his designated representative and all other interested parties who may appear and request to be heard. Following the public hearing and after review of the preliminary plat, the recommendation of the community development department and other departments of the city, and the rezone petition, if applicable, the planning board shall submit its recommendation to the city council as soon as practicable. If rezoning is involved, the recommendation by the planning board will be made simultaneously on the preliminary plat and the rezoning after public hearing on the rezone petition.

Step No. 4. After considering the recommendation of the planning board, the city council may, after an advertised public hearing, approve or disapprove the preliminary plat by resolution. Concurrent with consideration of the preliminary plat city council shall take action on any rezone petition submitted simultaneously with the preliminary plat in accordance with procedures contained in the land development code.

(c) Application for construction plan approval.

Step No. 5. After city council has approved the preliminary plat, the subdivider shall have the construction plans and specifications prepared per section 30-577 and shall submit three copies thereof to the public works department for review. If the construction plans fully comply with all construction requirements, the public works director shall approve them, advise the community development department, after which the subdivider may proceed with subdivision development. Subdivisions which have received preliminary plat approval may proceed in accordance with development standards which were in effect at the time of preliminary plat approval, with the following exceptions: If construction plan approval has not been granted within one year of preliminary plat approval, or if the subdivision has not been completely developed within five years of preliminary plat approval, the construction plan approval shall expire, and new construction plans must be submitted for review and reapproval. Plans thus submitted for review and reapproval shall comply with all regulations in effect at the time the plans are resubmitted.

(d) Applications for record (final) plat approval. Record (final) plats will be approved by the city council either when all improvements are completed in accordance with the approved construction plans, or when security has been posted guaranteeing completion of improvements satisfactory in form to the city attorney and city council, and equal in amount to 125 percent of the cost of all uncompleted improvements. A registered engineer shall prepare and submit a signed and sealed cost estimate, and the estimate must be approved by the city manager and city council.

Step No. 6. The subdivider has a record plat prepared, submits the original and one copy to the city manager or designee, and makes application for record plat approval. (See section 30-578 for required information to be placed on the record plat.)

Step No. 7. When the city manager reports that the plat fully complies with all city requirements, the city council may grant final approval to the record plat.

(Ord. No. 02-14, § 5, 3-4-2002)

Sec. 30-576. - Preliminary plat requirements.

(a) The following information shall be furnished by the subdivider along with the application for preliminary plat approval:

(1) The name and location of the proposed subdivision.

(2) The name, address and telephone number of the subdivider.

(3) The name, address and telephone number of the subdivision planner, engineer and surveyor.

(4) Date, north point and scale.

(5) A topographic survey at a one-foot vertical contour interval based on a mean low water datum, furnished by a licensed engineer or registered land surveyor.

(6) The location of all existing improvements, utilities, drainageways, water surfaces, wooded areas, easements, roads, buildings, railroads, culverts etc., for the area to be developed, and sufficient adjacent lands surrounding the area to show the overall picture.

(7) A location sketch showing the relationship of the proposed site to the surrounding area.

(8) Proposed street and lot layout.

(9) Method of sewage disposal and general description of proposed utility systems (water, sewer, gas, electric, telephone and television cable). Where it is proposed to use methods for sewage disposal other than central systems, the following are required:

a. Subsoil examinations made by the county health department or by a licensed professional engineer at the rate of at least one such examination per acre of the proposed subdivision. Soil shall be examined to a depth of six feet where possible. The health department representative shall keep a duplicate log of each individual examination, which log shall show the various strata encountered, the approximate thickness of each, the depth of water-bearing sand, and the depth at which the water stabilizes. The health department or licensed engineer shall report the results of its examinations to the subdivider and the city.

b. Percolation tests as may be required or deemed necessary by the county health department or by the city.

(10) Site and stormwater drainage management designs and calculations, furnished by a registered engineer.

(11) Proposed open areas, if any, including park sites, school sites, utility sites, community or publicly owned land, easements, etc.

(12) Proposed street trees and other elements in the right-of-way planting scheme.

(13) Present zoning and zoning of abutting land.

(14) Proposed zoning (if rezoning is petitioned).

(15) The acreage of the subdivision.

(b) Along with the application for preliminary plan approval, the subdivider shall furnish evidence in writing from appropriate state and county agencies that the preliminary plan complies with all state and county laws applicable thereto.

(Ord. No. 02-14, § 6, 3-4-2002)

Sec. 30-577. - Construction plan requirements.

(a) The following information shall be furnished by the subdivider and the appropriate utility companies at the time of application for approval of construction plans:

(1) The name and location of the proposed subdivision.

(2) The name, address and telephone number of the subdivider.

(3) The name, address and telephone number of the subdivision planner, engineer and surveyor.

(4) Date, north point and scale.

(5) Existing and proposed topography at a one-foot vertical contour interval based on mean low water datum, furnished by a registered engineer or land surveyor. Spot elevations may be required to provide sufficient level of detail of localized topographical features.

(6) Location of all existing improvements, utilities, drainageways, water surface, wooded areas, easements, roads, buildings, railroads and culverts.

(7) A location sketch, showing the relationship of the proposed site to the surrounding area.

(8) Street and lot layout, together with street profiles.

(9) Utilities (water, sewer, gas, electric, telephone and television cable) plans.

a. Where it is proposed to use methods for sewage disposal other than a public or private central system, the following are required:

1. Submission to the county health department of satisfactory engineering plans is required showing that the groundwater table can be maintained at not less than 36 inches below ground level.

2. All fill used shall meet FDOT standards. No marl, clay, muck, hardpan or other such unstable material shall be used for fill.

b. Where it is proposed to install a sewage disposal system other than the existing central sewer system, the following are required:

1. Submission to the county health department of acceptable plans of the sewage disposal system, which shall include the method of disposal of sewage effluent.

2. Final plan approval and approval number of the sewage disposal system by the state board of health.

3. A license from the city granting permission to operate the proposed system.

4. Satisfactory agreement between the city and the developer that as soon as the sewage disposal system is in operation all septic tank use will be discontinued and all sewage directed into the central system.

c. Construction plan approval may also be obtained if the subdivider concludes a satisfactory agreement with a licensed operator in which the operator agrees to install and operate a sewage disposal system within the subdivision. The other provisions called for in this section must be complied with even though such an agreement is concluded.

(10) Complete drainage plans and calculations, profiles and cross sections for on-site drainage improvements and, if necessary, off-site drainage improvements for stormwater outfalls and discharge.

(11) Open areas, including park sites, school sites, utility sites, community or publicly owned land, easements, etc.

(12) Landscaping, street trees, and other elements in the right-of-way plans.

(13) A typical street right-of-way cross-section, showing construction details for each type of street proposed.

(14) An affidavit by the surveyor or engineer certifying that all lots meet or exceed the minimum area and width requirements of the land development code.

(15) A signed and sealed estimate by a licensed engineer of the cost of improvements, or bids by two reputable bondable contractors for completion of improvements.

(b) Subsequent to approval of the construction plans, if changes are made during construction, the approved construction plans shall be modified so as to be an as-built record of the completed construction, signed and sealed by the developer's licensed engineer. Three complete sets of record drawings shall be furnished to the city manager within 90 days after final inspection and acceptance of constructed improvements.

(Ord. No. 02-14, § 7, 3-4-2002)

Sec. 30-578. - Record plat requirements.

(a) The following information shall appear on the record plat:

(1) Recorded permanent reference monument, or description and tie to such control point, to which all dimensions, angles, bearings and similar data on the plat shall be referred.

(2) Tract boundary lines, right-of-way lines of streets, alleys and easements, and property lines, all to be described by accurate dimensions, bearings or deflection angles, radii, arcs and central angles of all curves.

(3) Name or number and right-of-way width of each street or other right-of-way, including canals or abutting waterways.

(4) Location, dimensions and purposes of any easements.

(5) Lot numbering. Lots shall be numbered progressively, or, if in blocks, progressively numbered in each block, and the blocks progressively lettered or numbered.

(6) Location and description of permanent reference monuments.

(7) The names of record owners of adjoining unplatted land.

(8) Reference to recorded subdivision plats of adjoining platted land by record name, plat book and page number.

(9) Bulkhead lines, where applicable, adequately described as to location.

(10) Title, scale and north arrow.

(11) The name of the subdivision.

(12) Accounting for all land. All land within the boundaries of the plat must be accounted for either by blocks, lots, parks, streets, alleys, canals or excepted parcels.

(13) A location sketch.

(14) Required certificates (see section 30-579).

(b) All final plats shall be drawn in India ink on tracing cloth 19 inches wide × 24 inches long or 24 inches wide × 36 inches long, including a three-inch binding margin on the left side.

(c) All plats shall be prepared and filed in compliance with this article and the state maps and plats statute, F.S. ch. 177. Computation sheets showing closure of boundary surveys shall accompany submission of the final plat.

(Ord. No. 02-14, § 8, 3-4-2002)

Sec. 30-579. - Required certificates on final plat.

Required certificates on the final plat are as follows:

(1) Certificate of ownership and dedication for corporations.

CERTIFICATE OF OWNERSHIP AND DEDICATION (For Corporations)

STATE OF FLORIDA,)
COUNTY OF COLLIER)

_____, a Florida Corporation by its duly elected President, _____, and by its duly elected Secretary, _____, acting by and with authority by its Board of Directors, certifies ownership by said Corporation of the property described herein, and does hereby dedicate and convey ownership to all of the streets, walks, paths, alleys, thoroughfares, parks and other open spaces, canals and drainage facilities, and underlying land thereon, shown on this plat to the city for use by the general public forever.

IN WITNESS WHEREOF, the undersigned Corporation has caused these presents to be executed by its President and attested by its Secretary.

(CORPORATE SEAL)
By: _____
President

ATTEST: _____
Secretary

Approved by Mortgage Holders:
_____
_____
_____

STATE OF FLORIDA)
COUNTY OF COLLIER)

Before me, the undersigned Notary Public, personally appeared _____, President, and _____, Secretary of _____, a Florida Corporation, to me known to be the individuals described in and who executed the foregoing certificate of dedication, and they each duly acknowledged before me that they executed the same as such officers for and in behalf of said Corporation.

WITNESS my hand and official seal at Naples, Collier County, Florida, this _____/_____/_____ day of _____/_____/_____, A.D., 20_____.

_____ Notary Public, State of Florida at Large

My Commission expires _____/_____/_____.

(2) Certificate of ownership and dedication for individual owners.

CERTIFICATE OF OWNERSHIP AND DEDICATION
(For Individual Owners)

STATE OF FLORIDA)
COUNTY OF COLLIER)

_____ and _____, husband and wife, certify that we are the owners of the property described hereon, and do hereby dedicate all of the streets, alleys, walks, paths, thoroughfares, parks and other open spaces, canals and drainage or other easements shown on this plat to the use of the general public forever.

IN WITNESS WHEREOF, we have hereunto set out hands and seals, this _____/_____/_____ day of _____/_____/_____, 20_____.

WITNESSES:

_____(SEAL)
_____(SEAL)

Approved by Mortgage Holders:
_____
_____

STATE OF FLORIDA)
COUNTY OF COLLIER)

BEFORE ME, the undersigned Notary Public, personally appeared _____ and _____, husband and wife, to me known to be the individuals described herein and who executed the foregoing certificate of dedication, and they each duly acknowledged before me that they executed the same.

WITNESS my hand and official seal at Naples, Collier County, Florida, this _____/_____/_____ day of _____/_____/_____, A.D., 20_____

(SEAL)

_____
Notary Public, State of Florida at Large

My commission expires: _____/_____/_____.

(3) Surveyor's certificate.

SURVEYOR'S CERTIFICATE

I, the undersigned Registered Land Surveyor, hereby certify that to the best of my knowledge and belief this plat is a true representation of the lands described and shown, and that permanent reference boundary monuments have been placed as required by these regulations and the Statutes of the State of Florida thereunto appertaining.

Date of Survey:_____
Signature:_____
Name
Registered Land Surveyor
Florida Certificate No._____

Approved _____
Public Works Director
Date_____

(4) Certificate of approval of city council.

CERTIFICATE OF APPROVAL OF CITY COUNCIL

STATE OF FLORIDA)
CITY OF MARCO ISLAND)
COUNTY OF COLLIER)

It is hereby certified that this plat has been officially approved for record by the City of Marco Island, Florida, this _____/_____/_____ day of _____/_____/_____, A.D., 20_____.

ATTEST:

_____
City Manager/City Clerk

_____
Chairman, City Council

_____
City Attorney

(5) Certificate of approval of clerk of circuit court.

CERTIFICATE OF APPROVAL OF CLERK OF CIRCUIT COURT

STATE OF FLORIDA)
COUNTY OF COLLIER)

I, _____, Clerk of the Circuit Court of Collier County, Florida, hereby certify that this plat has been examined and that it complies in form with all the requirements of the Statutes of Florida pertaining to maps and plats, and that this plat has been filed for record in Plat Book _____, Page _____, Public Records of Collier County, Florida, this _____/_____/_____ day of _____/_____/_____, A.D., 20_____.

Clerk of the Circuit Court
Collier County, Florida

(6) Easement dedication.

EASEMENT DEDICATION

There are hereby expressly dedicated, perpetual non-exclusive public easements of ten feet along the rear lines of all lots for underground and overhead utilities, surface and underground drainage, and easements of six feet on each side lot line for the same purposes, but limited if used to one side of any one lot. Where more than one lot is intended as a building site, the outside boundaries of said building site shall carry the easements. The use of such easements by the city shall be supreme to the use by any other party. All other easements shown on this plat are hereby reserved in perpetuity for the purposes noted.

(Ord. No. 02-14, § 9, 3-4-2002)

Sec. 30-580. - Fees; recording of final plat.

(a) Subdivision plat fees shall be established by city council by resolution for the following:

(1) Preliminary plats or plans.

(2) Final plats or plans.

(b) The subdivider shall have the final plat or plan recorded in the circuit court clerk's office and shall furnish to the city clerk one Mylar (reproducible) and three paper (nonreproducible) prints of the recorded plat or plan.

(Ord. No. 02-14, § 10, 3-4-2002)

Sec. 30-581. - Design standards and improvement requirements.

(a) Conformance with comprehensive plan. The street and drainage improvements shall conform and be properly related to the transportation network contained in the comprehensive plan of the city.

(b) Street extensions. The street system shall compliment existing streets and shall make possible the future extension of streets into adjacent undeveloped land where appropriate.

(c) Driveway intersections. Local residential streets shall be planned so that residential lots will not have drives onto arterial streets.

(d) Angle of intersections. Intersections shall be as nearly at right angles as possible. All interior angles of intersections less than 90 degrees shall be reviewed and approved by the public works director.

(e) Type of intersections. In residential areas, "T" intersections are preferable to four-way intersections.

(f) Reserved.

(g) Offset intersections. Street jogs with centerline offsets of less than 200 feet are prohibited.

(h) Radius of curves. A tangent provided between reverse curves on collector streets shall comply with current FDOT standards. Minimum radius of centerline curvature on collector streets shall comply with current FDOT standards.

(i) Radius of curvature at intersections. Radius of curvature at back of curbline of street intersections shall comply with current FDOT standards.

(j) Bridges. All bridges proposed shall comply with state and federal requirements.

(k) Private streets. Private streets are prohibited unless specifically approved by city council.

(l) Width of right-of-way.

(1) The minimum width of street right-of-way shall be as follows:

a. Arterial streets: 120 feet.

b. Collector streets: 100 feet.

c. Local residential streets: 60 feet.

d. Turnaround diameter on dead-end streets (cul-de-sac): To be determined on a case-by-case basis.

(2) Subdivisions that adjoin existing streets which do not meet the minimum right-of-way requirements shall provide the following additional right-of-way or easements:

a. The entire right-of-way shall be provided where any part of the subdivision is on both sides of the existing street.

b. When the subdivision is located on only one side of an existing street, one-half of the required right-of-way shall be provided.

(3) Engineering requirements may result in greater right-of-way requirements than the minimums stated in this subsection. For standard street cross sections, refer to the city development specifications.

(m) Curbs. Concrete curb, curb and gutter or valley gutter, as approved by the city, shall be constructed along both sides of all streets, except in the case of temporary street construction, in which case the city council may waive the requirement.

(n) Minimum lane width.

(1) Arterial streets: 11 feet.

(2) Collector I streets: 11 feet.

(3) Local residential streets: Ten feet

(4) Dead-end streets: To be determined on a case-by-case basis.

(o) Streets. Construction specifications. All streets in new subdivisions shall consist of a properly prepared subgrade, an approved road base, and an asphaltic concrete wearing surface.

(p) Alleys. Alleys shall be provided at the rear of commercial and industrial properties, except waterfront properties. Where utilized, alleys shall be designed and constructed to accommodate their use by service vehicles. Alley right-of-way width shall be a minimum of 50 feet.

(q) Blocks.

(1) Block lengths shall not normally exceed 1,500 feet. Exceptions may be made when blocks border arterial streets or the waterfront, or in other unusual design situations.

(2) Corner lots shall be at least 15 percent wider at the front building lines than the minimum width permitted in the zoning district in which they are located.

(3) Through lots shall be avoided except where essential to provide separation of residential development from major streets or to overcome specific development disadvantages.

(4) Side lot lines shall be substantially at right angles to or radial to street lines where practicable.

(r) Drainage. An adequate storm drainage system, including necessary curbs, pipes, drop inlets, bridges, swale ditches, ponds, lakes and their outlets, subsurface drains, etc., shall be provided for the proper drainage of surface water. For construction details, refer to the city development specifications, culverts.

(s) Sidewalks. Sidewalk locations shall be established by the city and indicated on the approved plat. Sidewalks shall be constructed on both sides of all streets and roadways and must be installed by the developer prior to acceptance of any street by the city.

(t) Utilities.

(1) Water service. The subdivider shall provide for a public water distribution system. Water distribution lines, sized and placed in accord with the city or utility provider development specifications, shall be installed and dedicated by the subdivider. If water service to other areas will be facilitated by installing larger mains than necessary to serve the developer's subdivision, the city may require that the larger pipes be installed. In this event, the city or other parties shall pay the difference between the actual cost and the cost which would have been incurred had larger pipes not been required.

(2) Sewer service. Pursuant to connection requirements contained in the comprehensive plan.

(3) Electric, telephone and television cable service. Electric, telephone and television cable service shall be provided to each building lot in accord with the city development specifications.

(u) Recreation area and facilities. Each subdivision shall be served by recreation lands and facilities appropriate to the needs of the subdivision's future residents. Appropriate recreation areas and facilities will vary with the size and nature of the subdivision. Subdivision developers may either dedicate recreation lands to the city for public recreation areas, or create recreation areas and facilities for the exclusive use of future residents of the subdivision. No specific recreation area or facilities requirement is made, but the planning board and city council shall ensure that an appropriate amount of recreation land and facilities are included in each new subdivision.

(v) Planting of street trees in right-of-way; grassing of unpaved portions of right-of-way. Street trees shall be installed along both sides of all subdivision streets. All unpaved portions of rights-of-way shall be seeded or sprigged. All such designs and planting work shall be in conformance with city standards.

(w) Street numbers and names. Street numbers shall be assigned by the department of development services. Proposed streets which are obviously in alignment with others existing and named shall bear the assigned name of the existing streets. In no case shall the name for a proposed street duplicate or be phonetically similar to existing street names, and the fact that the name is sought to

be distinguished only by employing a different designation of the type of public way, such as street, avenue, boulevard, drive, place, court and the like, shall not suffice. Street names shall require the approval of the postmaster of the city post office.

(x) Street name signs. City-approved street name signs shall be installed by the developer at each street intersection.

(y) Security guaranteeing completion of improvements.

(1) Where the required improvements have not been completed prior to the submission of the record plat, the approval of the plat shall be subject to the subdivider guaranteeing the installation of the improvements by filing a performance bond, cashier's check or other security acceptable to the city attorney and city council, in the amount of 125 percent of the construction cost, as approved by the city manager. Whenever security guaranteeing performance is posted, the security instrument may provide that portions of the security deposit, proportionate to the work completed, may be released to the subdivider as work progresses. The amount to be released shall be determined by the city manager in accordance with the provisions of this subsection, subject to the approval of the city council. The cost of any state and federal documentary stamps and any other fees for recording security instruments shall be paid in cash to the city by the subdivider.

(2) Amounts given as security in cash or by certified or cashier's check may, at the option of the subdivider and with the approval of the city, be deposited in an interest-bearing account, or invested in some other manner. Any interest which may be earned on such security furnished by a subdivider shall be due and payable to the subdivider upon satisfaction of the requirements and conditions of the bond.

(z) Maintenance of improvements. For a period of at least one year following city certification of completion and acceptance of the required subdivision improvements of each unit, the subdivider shall be responsible under a performance or maintenance bond for performing any maintenance work deemed by the city to be the result of defective construction materials or installation.

(aa) Vacation of streets, alleys, easements and subdivision plats.

(1) Petitions to vacate, abandon, discontinue or close any public street, alleyway, dedicated easement or subdivision plat, either in whole or in part, may be initiated by the city council, the planning advisory board or the city manager, or by any person affected thereby.

(2) Such petitions shall be filed with the city manager or his designee, and shall be accompanied by a legal description of the property or easement proposed to be vacated, certified by a qualified engineer. Petitions to vacate any plat, either in whole or in part, shall be accompanied by an attorney's opinion verifying that the person making application for the vacation owns the fee simple title to the whole or part of the tract covered by the plat sought to be vacated.

(3) A processing fee established by city council by resolution is required.

(4) The planning board shall hold a public hearing to consider such petitions, and, as soon as practicable thereafter, the board shall submit its recommendation in writing to the city council, together with a copy of the minutes of the hearing. The city council shall hold a public hearing to consider the vacation, and shall publish notice thereof in a newspaper of general circulation in the city in not less than two weekly issues of the paper.

(5) Following the public hearing, the city council may, by resolution, approve the vacation if it is determined that there is no present necessity, or reasonably foreseeable necessity, for the retention of the street, alleyway, easement or subdivision plat, and that the right to convenient access of adjoining property owners will not be affected thereby.

(Ord. No. 02-14, § 11, 3-4-2002)

Secs. 30-582—30-620. - Reserved.

ARTICLE VIII. - ARCHITECTURAL AND SITE DESIGN STANDARDS

Sec. 30-621. - Intent and purpose.

The purpose of these architectural and site design regulations is to supplement existing development criteria with specific criteria that apply to the design of all new construction, redevelopment and renovation of commercial buildings and projects. The goal is to create and maintain a positive community image and identity by providing for architectural and site design treatments which will:

(1) Enhance the visual appearance and character of the community;

(2) Increase the safety and convenience of commercial and mixed use projects on Marco Island;

(3) Provide incentives for development and redevelopment that is directed towards supporting pedestrian and bicycle access and interconnectivity of sites; and

(4) Enhance the quality of life on Marco Island.

The purpose of building design is to maintain and enhance the attractiveness of the streetscape and the existing architectural design of the community. Buildings shall have architectural features and patterns that provide visual interest from the perspective of the pedestrian; reduce massing; recognize local character; and are site responsive. Corporate chain building designs and prototype/generic architectural designs not specifically designed for the city and for the individual characteristics of the site and architectural overlay district shall not be allowed. Facades shall be designed to reduce the mass/scale and uniform monolithic appearance of large unadorned walls, while providing visual interest that will be consistent with the community's identity and character through the use of detail and scale. Articulation is accomplished by varying the buildings mass in height and width so that it appears to be divided into distinct massing elements and details that can be perceived at the scale of the pedestrian/motorist.

(Ord. No. 02-06, § 1, 1-22-2002)

Sec. 30-622. - Applicability.

Provisions of this article are applicable in all commercial zoning districts, commercial overlay districts, commercial components of planned unit development (PUD) districts, developments of regional impacts (DRIs), public use districts and community facility districts. All new development, redevelopment, and renovations shall adhere to the appropriate architectural overlay district styles, zoning district regulations, and site design guidelines incorporated within this article. Compliance with the standards set forth in this article shall be demonstrated by submittal of architectural drawings in accordance with this article, a landscape plan in accordance with the LDC, and a site development plan or site improvement plan in accordance with article IX. Deviations from these regulations may be authorized when:

(1) The community development director or designee determines specific regulations or requirements are in conflict with the city's building code or life/safety code;

(2) The planning board determines that costs associated with rigid compliance will create an economic hardship on the owner and render the project prohibitive. A creative and innovative solution shall be demonstrated to the planning board prior to allowing any departure from these regulations for hardship cases.

(Ord. No. 02-06, § 2, 1-22-2002)

Sec. 30-623. - Design review.

(a) All new construction, redevelopment and renovations of commercial buildings and projects shall be reviewed by the city staff for compliance with the regulations contained in this article. An immediate appeal may be brought to the city planning board for cases that cannot be resolved at staff level. Staff shall describe the areas of concern, inconsistencies, and/or departure(s) from this article.

(b) Reserved.

(c) Maximum impervious surface ratios. The maximum impervious surface ratio shall be 76 percent for new commercial development/redevelopment occurring on conforming commercial lots of record. However, this maximum may be increased in cases where the new commercial development/redevelopment incorporates features and/or amenities that advance other adopted policies, or which promote thoughtful, innovation site design and planning. In no event shall the impervious surface ratio exceed 95 percent. Examples of situations where an increase can be granted administratively include:

(1) Where the impervious surface ratio would result in a decrease of existing parking facilities on properties seeking to redevelop and/or renovate.

(2) Where interconnections between existing and/or future parking facilities are provided or shown on the approved site development plan.

(3) When enhanced pedestrian facilities and connections are provided.

(4) Where below ground water management facilities are provided or incorporated into the approved site development plan.

(5) Where structures located on in-fill lots are attached to adjacent structures, and side yards are eliminated.

(6) Where decorative plazas, fountains, or other impervious, aesthetic features are provided.

(7) Where improved access is required for life safety purposes.

(8) Where innovative parking programs are involved.

(9) Where the proposed development incorporates enhancements to adjoining properties or the public right-of-way.

(d) Mixed use ratios. The commercial, residential, and useable open space components of mixed use developments shall be consistent with the provisions of the underlying zoning district and comprehensive plan.

(Ord. No. 02-06, § 3, 1-22-2002)

Sec. 30-624. - Design regulations.

(a) First floor facades and window heights. First floor facades over 14 feet zero inches in height (measured from the finished floor elevation to underside of ceiling) shall not provide continuous windows 12 feet zero inches above the finished floor elevation. Windows may be extended above this height provided they are separated by a minimum distance of four feet zero inches, and the facade is designed to appear as a two-story building. (See illustration 4.1, on file in the office of the city clerk.) Theaters, churches, civic and cultural buildings shall be excluded from this height restriction.

(b) Entryways. Entryway design elements and variations are intended to give protection from the sun and adverse weather conditions. These elements are to be integrated into a comprehensive design style for the project, and extend outward from the building a minimum of six feet. All buildings shall have clearly defined, highly visible customer entrances which shall include the following:

(1) Benches or other seating components; and one of the following:

a. Decorative landscape planters or wing walls that incorporate landscaped areas;

b. Entry doors shall be a minimum of ten feet from parking or drive areas.

c. Structural or vegetative shading.

(c) Fenestration standards. (The design and disposition of windows and other exterior openings of a building.) Front facades on a ground floor shall have either windows or doors along no less than 40 percent and no more than 75 percent of their horizontal length. Rear and side facades at the ground level shall have windows along no less than 20 percent of their horizontal length. The window and door areas above the ground floor shall be a minimum of 20 percent and a maximum of 45 percent. False windows may be used and flush mounted provided they are banded by a minimum four-inch band and utilized on the side and rear building facades. Buildings shall be oriented to maximize pedestrian access, use, and view of any adjacent navigable water bodies. (See illustration 4.3, on file in the office of the city clerk.)

(d) Glass tinting. All individual windows greater than 20 square feet shall provide tinting to reduce glare and ambient light traveling outward from inside the building. Mirrored glazing is prohibited.

(e) Facade and vertical wall height transition. The purpose of this section is to provide transitional massing in the vertical direction of large buildings, to help structures relate to the massing of the Island, and to provide sufficient light between buildings. For buildings and structures over two stories, the third story and above should be stepped inward or outward to provide transitional massing in a manner compatible with the adjacent and/or allowable buildings. Where the adjacent property is undeveloped, the transition line should occur no higher than the third floor line. (See illustration 4.5, on file in the office of the city clerk.)

(1) Facade style. All facades of a building shall be designed with consistent architectural style, detail, color, and trim features.

(2) Facade massing. Exterior facades shall be designed to employ the following design treatments (see illustration 4.5.2, on file in the office of the city clerk):

a. For structures 12,500 square feet and over, no horizontal length or uninterrupted curve of the building facade viewed from a right-of-way or navigable waterway shall exceed 50 linear feet without a projection or recess. For arcaded facades, no horizontal length or uninterrupted curve of the arcaded facade shall exceed 65 feet without a projection or recess, (varied lengths are desirable). Projections and recesses shall have a minimum depth of three feet.

b. For structures under 12,500 square feet, no horizontal length, uninterrupted curve or arcaded building facade viewed from a right-of-way or navigable waterway shall exceed 40 feet without a projection or recess. Projections and recesses shall have a minimum depth of two feet.

c. Primary facades shall incorporate the following features along a minimum of 50 percent of their horizontal length per affected side. These features include, but are not limited to: arcades, a minimum of six feet clear in width; entry features; windows; or other such architectural design elements. Awnings are excluded from this calculation unless associated with windows/doors and are in increments of ten feet in length or less. (See illustration 4.7.c, on file in the office of the city clerk.)

(3) Facade design treatments. Both single and multi-use buildings and projects shall also be required to provide a minimum of five of the following building design treatments for primary facades, and for one-third of side facades located contiguous to the front facade (see illustration 4.5.3, on file in the office of the city clerk):

a. Canopies or porticos, integrated with the building's massing and style.

b. Roof overhangs, with a minimum depth of two feet zero inches;

c. Arcades, a minimum of six feet clear in width;

d. Additional peaked roof forms or roof elements such as dormers, cupolas, etc.

e. Ornamental and structural architectural details, other than cornices, which are integrated into the building structure and overall design, and used consistently around the building;

f. Projected or recessed entry feature;

g. Clock or bell towers, or functional roof treatments/embellishments;

h. Continuous detailing under the eaves such as a cornice, exposed rafter tails, etc., or in the case of a parapet continuous banding or capping shall be provided or;

i. Any other treatment which, in the opinion of the community development director (or designee), meets the intent of this article;

And one of the following site design elements for buildings 12,500 square feet and over:

j. Decorative landscape planters or planting areas, a minimum of five feet wide, and areas for shaded seating consisting of a minimum of 100 square feet, per 10,000 square feet of air conditioned ground floor area.

k. Integration of specialty pavers, or stamped concrete along a minimum of 60 percent of the building's walkway.

(4) Facade detail features. The design elements in the following standards shall be integral parts of the building's exterior facade and shall be integrated into the overall architectural style. These elements shall be three-dimensional and not consist of applied graphics, or paint.

(5) Facade blank wall areas. Blank wall areas shall not exceed ten feet in vertical direction nor 20 feet in horizontal direction of any facade. Control and expansion joints within this area shall constitute blank wall area. Decorative control and expansion joints may offset blank wall areas, provided relief and reveal work is a minimum depth of one-half inch deep and wide. Patterns for reveal and relief work shall not be greater than three feet apart and shall be articulated by a decorative molding outlining the pattern. Landscaping may be utilized to reduce blank wall areas but shall not be used in place of the overall architectural treatment. Landscape area may offset blank wall areas of a facade for up to 15 percent of any facade providing landscaping is within ten feet of the facade wall. (See illustration 4.5.5, on file in the office of the city clerk.)

(f) Window detailing. Windows shall be recessed along the front building facades. The spacing, configuration, trim, and detailing of all window elements shall be appropriate and complementary to the overall design. False windows may be used and flush mounted provided they are banded by a minimum four-inch band and utilized on the side and rear building facades.

(g) Roof treatment. Variations in rooflines shall be used to add interest to, and reduce the massing of buildings. Roof features shall be in scale with the building's mass and complement the character of adjoining and/or adjacent buildings and neighborhoods. Roofing material should be constructed of durable high quality material in order to enhance the appearance and attractiveness of the community. The following standards identify appropriate roof treatments and features.

(1) Roof edge and parapet treatment: At a minimum of two locations, the roof edge and/or parapet shall have a vertical change from the dominant roof condition. At least one such change shall be located on a primary facade adjacent to a street right-of-way. (See illustration 4.7.1, on file in the office of the city clerk.) Roofs shall meet the following standards:

a. Parapets in association with flat roofs or low slope roofs shall be used to conceal mechanical equipment. Parapets shall be used as part of the wall below or as a part of a colonnade, however shall not exceed four feet above the flat roof.

b. Primary roof pitches shall be between 3:12 and 12:12.

c. Roof overhangs shall be a minimum of three feet zero inches, or when less than three feet zero inches shall provide a cornice or banding (minimum eight inches) under the fascia.

d. The minimum allowed fascia is six inches.

(h) Predominant exterior building materials that are prohibited. Predominant exterior building materials that are prohibited include:

(1) Plastic and vinyl siding;

(2) Corrugated metal is limited to roofing or five percent of a facade;

(3) Tile, except as a minor accent which does not exceed two percent of the affected facade total;

(4) Smooth or rib-faced concrete block; and

(5) Applied stone in an ashlar or rubble look, except as a minor accent, which does not exceed ten percent of the facade total.

(i) Predominant exterior color(s). The use of black, primary colors, secondary colors, or fluorescent colors is prohibited as the predominant building color(s). Earth tone and pastel colors are encouraged. For buildings, roofs and projects that are non-conforming because of their existing exterior color(s), each shall be brought into compliance with these exterior color regulations within five years of adoption of this article. The same shall apply for building trim colors. Failure to comply with these standards shall constitute a violation of this article.

(j) Building trim color(s). Building trim and accent areas may feature any color except fluorescents. These colors shall be limited to a maximum trim height of ten inches and shall not encompass more than five percent of the affected facade.

(1) New neon or neon-type tubing shall be prohibited.

(k) Awnings. Awnings shall be made of cloth or canvas. The drip edge of the awning shall not exceed 24 inches. Awnings shall not have a bottom soffit panel, nor shall they be backlit. Down lighting is permitted. Awnings shall be associated with windows, doors or openings (see illustrations 4.11.1 and 4.11.2, on file in the office of the city clerk) subject to the following:

(1) Awnings may not extend more than 12 inches past the door or window above which they are affixed, and shall be a minimum of eight inches from the edge or corner of any facade. Continuous awnings that wrap around a building or multiple facades are prohibited. (See illustration 4.11.a, on file in the office of the city clerk.)

(2) Awnings shall not exceed five feet in height, as measured from the bottom of the drip edge to the top of the awning structure.

(3) Awnings that extend more than five feet from the facade of a building should provide column supports. Column supports should be a minimum of six inches and provide a top and base plate or designed per appropriate district design standards and building code regulations.

(l) Lighting. Commercial buildings and projects, including out parcels, shall be designed to provide safe, convenient, and efficient lighting for pedestrians and vehicles. Lighting shall be designed in a consistent and coordinated manner for the entire site. The lighting and lighting fixtures shall be integrated and designed to blend into the landscape so as to enhance the visual impact of the project on the community. For additional regulations on lighting see chapter 6, article V.

(1) Design. Lighting shall be used to accent key architectural elements and/or to emphasize landscape features. Light fixtures shall be designed as an integral design element that complements the design of the project through style, material or color, or blend completely with the landscaping. Colored lighting (other than shades of white) shall not be permitted.

(2) Shielding. Lighting shall be designed so as to provide light pollution control and prevent glare, light trespass and hazardous interference with automotive and pedestrian traffic on adjacent streets and all adjacent properties.

(3) Fixture height. Luminous center shall be a maximum of 18 feet in height within parking lots and shall be a maximum of 14 feet in height within non-vehicular pedestrian areas (see illustration 4.18.c, on file in the office of the city clerk). With respect to sea turtles, special shielding is

required during "turtle season" (May to October) where lights may be visible from any spot on Marco Island's Gulf beaches. See LDC for further regulations.

(m) Fences and walls. Fencing forward of the building setback in commercial districts shall be permitted subject to the following conditions (see illustration 4.13, on file in the office of the city clerk):

(1) All fencing located in a front yard shall not be located within the required landscape buffer. All fencing located adjacent to an alley right-of-way may encroach five feet into the required landscape buffer.

(2) Fencing located adjacent to a right-of-way shall provide all code required landscaping along the side facing the right-of-way (50 percent if located along alley right-of-way).

(3) Chain link fencing is prohibited in all commercial zoning districts except within the Elkcam Circle Zoning Overlay as specified herein.

(4) Split rail fencing shall be allowed within a landscape buffer as an embellishment.

(n) Miscellaneous structures. Outside play structures. Outside play structures shall be limited to earth tone colors with a maximum of three colors. Play structures shall be located on side or rear yards and located behind building lines unless within an enclosed, air conditioned space that has been designed according to the architectural standards. Play structures shall not exceed 14 feet zero inches in height as measured from the first finished floor elevation.

(o) Drive-through window standards. Drive-through windows and lanes shall be designed to adhere to the following standards:

(1) A permanent covered porte-cochere type structure, other than awning/canvas type structure(s), may be installed, extending the entire width of the drive-through and covering the service window(s) and vehicular lane. Such structure shall be integrated structurally and architecturally into the design of a building. Drive-through windows not located under a covered structure (see illustration 4.15.a, on file in the office of the city clerk) shall not be placed between a street right-of-way and the associated building, unless the vegetation required for a Type "B" landscape buffer is installed within the buffer width required for the project and maintained along the entire length of the drive-through lane between the drive-through lane and the adjacent right-of-way. (See illustration 4.15.a, on file in the office of the city clerk.)

(2) Only a single drive-through facility (which may include multiple lanes) is permitted per building.

(p) Off-street parking. Commercial buildings and projects, including out parcels, shall be designed to provide safe, convenient, and efficient access for pedestrians and vehicles. Parking shall be designed in a consistent and coordinated manner for the entire site. The parking area shall be integrated and designed so as to enhance the visual appearance of the community. When large parking areas are needed, parking shall be divided into smaller units that are more appropriate to the scale of the community.

(1) Parking design. Parking, utilizing the same degree of angle, shall be developed throughout the site to provide efficient and safe traffic and pedestrian circulation. A single bay of parking provided along the perimeter of the site may vary in design in order to maximize the number of spaces provided on-site. The mixture of one-way and two-way parking aisles, or different degrees of angled parking within any parking area is prohibited, except as noted above, or where individual parking areas are physically separated from one another by a continuous landscape buffer, a minimum five feet in width, (consisting of a continuous hedge a minimum of three feet in height with a canopy tree spaced every 30 linear feet) with limited vehicular access (see illustration 4.16.1, on file in the office of the city clerk). Off-street parking design shall consist of the following:

a. No individual parking lot shall contain more than 60 parking spaces. For developments that require more than 60 spaces, parking lots shall be broken down into sub-areas containing not more than 60 spaces. Parking sub-areas shall have connecting driveways for ease of on-site circulation. A five-foot wide landscape buffer shall separate parking sub-areas. Said

buffer shall be provided at the perimeter of the sub-area, and shall include a continuous and maintained hedge between two to three feet in height. A berm may be utilized in place of the hedge and be planted with a ground cover. The berm shall have a minimum height of 1½ feet above the grade of the parking lot with total height of berm and buffer not to exceed three feet. Trees shall be provided in the required landscape buffer, not to exceed 30 feet on center, and shall be a minimum of 12 feet in height upon installation. No additional landscape buffer is required adjacent to a required front yard landscape buffer. (See illustrations 4.16.1.a and 4.16.1.b, on file in the office of the city clerk.)

b. All rows of parking spaces shall contain no more than ten parking spaces uninterrupted by a required landscape island which shall measure inside the curb not less than eight feet in width and at least eight feet in length and at least 100 square feet in area and shall include one canopy tree. For additional landscaping requirements for parking areas, see the LDC.

c. Location—Interior lots for projects 12,500 square feet of floor area and over. No more than 70 percent of the off-street parking for the entire commercial building or project shall be located between any primary facade of the commercial building or project and the abutting street or navigable waterway. The Marco Lake Subdistrict is exempt from this requirement. (See illustration 4.16.1.c, on file in the office of the city clerk.)

d. Location—Corner lots for projects 12,500 square feet of floor area and over. No more than 80 percent of the off-street parking for the entire commercial building or project shall be located between any primary facade of the commercial building or project and the abutting street or navigable waterway area, with no single side to contain more than 65 percent of the required parking. (See illustration 4.16.1.d, on file in the office of the city clerk.)

e. Location—Alleys. Parking spaces that take direct access from an alley right-of-way shall be separated from the side yard property line by a ten-foot wide landscape buffer island. A five-foot wide (minimum) landscape buffer shall be placed along the front of these spaces when parking is directly accessed from the alley. These landscaping requirements shall not apply to the Elkcam Circle Zoning Overlay. Parking spaces shall be provided entirely on the subject property and shall not encroach into the alley right-of-way. (See illustration 4.16.1.e, on file in the office of the city clerk.)

(q) Parking garage. All parking structures shall provide opaque walls at all corners, extending a minimum distance of ten feet from the corners. Stairways may be excluded from these calculations when located at other locations along the building. A minimum of 60 percent of any primary facade of a parking garage or covered parking facility shall incorporate three of the following (see illustration 4.17, on file in the office of the city clerk):

(1) Transparent windows, with clear or lightly tinted glass, where pedestrian oriented businesses are located along the facade of the parking structure;

(2) Decorative metal grille-work or similar detailing (at a minimum of 50 percent of facade length) which provides texture and partially and/or fully covers the parking structure opening(s);

(3) Art or architectural treatment such as sculpture, mosaic, glass block, opaque art glass, relief work, or similar features (at a minimum of five percent and a maximum of seven percent of the facade); or

(4) Vertical trellis or other landscaping for pedestrian plaza area of at least 100 square feet in area for each elevation that faces the public right-of-way.

(r) Service function areas (SFA). To diminish, in a safe manner, the visual impacts of service functions that may distract or have a negative impact on the streetscape, landscape and/or the overall community image. Service function areas include loading, storage, mechanical equipment, and solid waste disposal facilities and other services, subject to the following criteria (see illustration 4.18, on file in the office of the city clerk):

(1) Buffering and screening standards: Loading areas or docks, outdoor storage, trash collection, mechanical equipment, trash compaction, vehicular storage, vehicular parking for the purpose

of loading and unloading, recycling, rooftop equipment and other service function areas shall be fully screened and out of view from adjacent properties at ground view level. In the case of existing commercial properties that add recycling facilities, no additional screening will be required if the containers cannot be seen from the street or if located in the C-5 zoning district. Service function areas shall not be located along a public street right-of-way (with the exception of alleys) unless approved by a variance. All dumpsters or recycle receptacles shall be screened on all sides to prevent visibility of containers by neighboring property owners. A dumpster or recycle container may encroach into the side yard setback, but shall not be located closer than five feet zero inches from any property line (except when located adjacent to a residential zoning district where the minimum distance shall be ten feet zero inches). For existing commercial properties, dumpster or recycle containers may be placed zero feet from the property line if, in the opinion of the city manager or designee, such placement is not a health or safety risk, except when located adjacent to a residential district where the minimum distance shall be ten feet. A landscape hedge a minimum of four feet in height and four feet on center shall be planted around the perimeter of the dumpster enclosure when located adjacent to a residential zoning district.

(2) Materials and design standards: Screening material and design shall be consistent with design treatments of the primary facades of the commercial building/project and/or the landscape plan.

(s) Pedestrian nodes at intersections. A pedestrian node shall be provided at the intersection of all corner lots. The pedestrian node shall be a minimum of 300 square feet in size and consist of landscaping, grass, brick pavers, and two benches. The node shall be designed to encompass a portion of the right-of-way contiguous to the intersection and shall be developed on level grade. The property owner shall provide an easement on the subject property for such node, adjacent and contiguous to the perimeter landscape buffer. A connection(s) with the perimeter sidewalk shall be provided. (See illustration 4.19, on file in the office of the city clerk.) One parking space credit shall be granted for providing a pedestrian node.

(t) Shopping center outparcels. Shopping centers shall provide unified architectural design and site planning between outparcels and the main structure and surrounding area in order to enhance the visual experience for the vehicular and pedestrian public, and to provide for safe and convenient vehicular and pedestrian access and movement within the site. All exterior facades of an out parcel building shall be considered primary facades and shall employ architectural, site, and landscaping design elements which are integrated with and common to those details used on the primary structure on site. These common design elements shall include colors, details, and materials associated with the overlay district. When the use of common wall, side-by-side development occurs, continuity of facades, common architectural style, and consolidated parking for several businesses on one parking lot is encouraged. Outparcels that are adjacent to each other are encouraged to provide for vehicular connection between parking lots and provide for pedestrian interconnection. Outparcels shall be designed and integrated with the main project and associated design district.

(u) Natural and manmade bodies of water, including wet/dry retention areas. The shape of a manmade body of water, including wet retention areas, shall be designed to appear natural. Natural shall be described as having off-sets in the edge alignment that are a minimum of ten feet and spaced 20 feet apart with the exception of areas that are less than ten feet zero inches wide. All bodies of water, including wet retention areas, exceeding 20,000 square feet in area, which are located adjacent to a public right-of-way, shall be incorporated into the overall design of the project in at least two of the following ways (see illustration 4.21, on file in the office of the city clerk):

(1) Provide a five-foot wide walkway with trees an average of 30 feet on center and shaded benches a minimum of five feet in length or picnic tables with one located every 150 feet.

(2) Provide a public access pier with covered structure and seating.

(3) Provide an intermittent shaded plaza/courtyard, a minimum of 200 square feet in area, with benches and/or picnic tables adjacent to the water body.

(v) Newspaper and periodical vending machines. (Reserved.)

(w) Gasoline service stations. The purpose and intent of this section is to provide standards to integrate gasoline stations and their accessory uses with the architectural character of Marco Island subject to the following:

(1) Design standards. Gas stations shall utilize a roof pitch between 3:12 to 6:12 for the principal structure and all accessory buildings. Gas stations shall be subject to all architectural and site design guidelines contained in this article.

(2) Canopy standards. Canopies shall be designed in a manner consistent with the principal structure. This shall include the treatment of columns, fascia, and roof pitch. Canopy lighting shall be recessed within the canopy, and shall not be surface mounted. Lighting shall be confined to the canopy area only. Columns shall be a minimum of 12 inches × 12 inches.

(3) Pump standards. No more than two pumps shall be permitted per island, unless the canopy structure is attached to the principal structure, in which case four pumps per island may be permitted. No more than four islands shall be permitted under each canopy. The minimum clear height of the canopy shall be 14 feet six inches, which is measured from the pavement to the ceiling of the canopy. The maximum clear height of the canopy shall be 16 feet zero inches.

(x) Landscaping. Landscaping shall be used to enhance and complement the site design and building architecture of commercial buildings and projects. Landscaping provided within the vehicular and pedestrian use areas is intended to enhance the visual experience of the motoring and pedestrian public, commonly referred to as the "streetscape." In addition to the landscaping requirements of the LDC, the following requirements shall apply:

(1) All new trees, including palms, shall be of a species having an average mature height of 20 feet or greater.

(2) The first row of landscape islands located closest to the building front and sides shall be landscaped with trees, palms, shrubs and groundcover. Canopy trees shall have a clear trunk area to a height of six to seven feet. (See illustration 4.24.b, on file in the office of the city clerk.)

(3) Tree and lighting locations shall be designed so as not to conflict with one another. (See illustration 4.24.c, on file in the office of the city clerk.) A lighting plan shall be submitted concurrently with a landscape plan to demonstrate this.

(4) Building perimeter plantings: All buildings shall provide perimeter landscaping in the amount of 100 square feet of planters per 1,000 square feet of building ground floor area, except within the Elkcam Circle Zoning Overlay. Planters shall be located adjacent to the building and shall consist of landscape areas, raised planters or planter boxes that are a minimum of five feet wide. Seating courtyards, eating areas and plazas may be incorporated within them. (See illustrations 4.24.d.1. and 4.24.d.2, on file in the office of the city clerk.)

(y) Unified sign plan. Where multiple on-premises signs are proposed for a single site or project, or in the case of a shopping center or multi-use building, a unified signage plan shall be employed. Applications for site development or site improvement plan approval shall be accompanied by a graphic and narrative representation of the unified signage plan to be utilized on the site. Renovations and redevelopment of existing commercial buildings and projects shall also require submittal of a unified sign plan. The unified sign plan may be amended and resubmitted for approval to reflect style changes or changing tenant needs. Design elements which shall be addressed in both graphic and narrative form include the following:

(1) Adherence with the provisions of the sign ordinance;

(2) Colors;

(3) Construction materials and methods;

(4) Architectural design;

(5) Illumination method;

(6) Copy style;

(7) Building number(s), address;

(8) Sign type(s) and location(s).

(Ord. No. 02-06, § 4, 1-22-2002; Ord. No. 10-10, § 2.2., 8-16-2010)

Sec. 30-625. - Parking credits and pedestrian facilities.

(a) Parking credits. Parking credits shall be granted for new construction, renovations, and redevelopment of commercial buildings and projects developed with the following amenities. In no case shall the parking credits exceed 20 percent of the total required parking. The parking credits for each category shall only be utilized once per property.

(1) Interconnection of parking lots and driveways. A 15 percent reduction in the required amount of off-street parking may be approved for projects providing vehicular interconnects and/or shared driveways to adjacent projects, subject to an off-street parking agreement as specified in the off-street parking and loading ordinance (article V of this chapter). The shared driveway must directly access the parking lots on both properties, and the property owner must file a cross-access agreement with the city in order to be eligible for the credit.

(2) Pedestrian access. One parking space credit shall be granted to each development for providing a pedestrian walkway(s) a minimum of five feet in width from a public sidewalk to the storefront customer entryway(s) and from the storefront entryway to the adjacent properties.

(3) Bicycle rack. One parking space credit shall be granted for providing a bicycle rack(s) and pedestrian bench(s) on-site. The bicycle rack shall be capable of storing a minimum of four bicycles and the pedestrian bench shall be a minimum of five feet in length. Bicycle racks and benches shall be placed in a visible location within 15 feet of the front building elevation(s) or along the pedestrian access path. The area around the bicycle rack and bench shall be landscaped with either one minimum 12-foot shade tree and four three-gallon shrubs or three eight-foot (gray wood) palm trees and four three-gallon shrubs per every bicycle rack and bench provided. The landscaping is in addition to any other landscape requirements of the land development code. (See illustration 5.1.c, on file in the office of the city clerk.)

(4) Pedestrian node. One parking space credit shall be granted for providing a pedestrian node at the intersection of all corner lots, in accordance with section 30-624(s).

(5) Pedestrian waterfront walkway. Two parking space credits shall be granted for providing waterfront pathways along a seawall, in accordance with subsection (c).

(6) [Recycling containers.] One parking credit shall be granted for the installation of one or more recycling containers, if, in the opinion of the city manager or designee, the use of additional space previously approved for parking becomes necessary for such facilities.

(b) Pedestrian walkways. To provide safe opportunities for alternative modes of transportation by connecting with existing and future pedestrian and bicycle pathways within the city and to provide safe passage from the public right-of-way to the commercial building or project, and between alternative modes of transportation. Pedestrian ways, linkages and paths shall be provided from the building entry(s) to surrounding streets, external sidewalks, and out parcels. Pedestrian ways shall be designed to provide access between parking areas and the building entrance(s) in a coordinated and safe manner. Pedestrian ways may be incorporated within a required landscape perimeter buffer, provided said buffer is not less than ten feet in width on average. Shared pedestrian walkways are encouraged between adjacent commercial projects. Pedestrian access standards shall be provided as follows:

(1) Minimum ratios. Pedestrian ways shall be provided at a minimum ratio of one per front yard or one for each public vehicular entrance to a project, whichever is greater. This excludes ingress and egress points intended primarily for service, delivery or employee vehicles, and ingress and egress points from alleys.

(2) Minimum dimensions. Pedestrian walkways shall be a minimum of five feet wide with no vehicular overhang.

(3) Materials. Pedestrian walkways shall be consistent with the provisions of Section 4.5 of the Americans with Disabilities Act (ADA) Accessibility Guidelines. Materials may include specialty pavers, concrete, colored concrete or stamped pattern concrete.

(4) Pedestrian crosswalks at building perimeter. Building perimeter crosswalks shall be designed and coordinated to move people safely to and from buildings and parking areas by identifying pedestrian crossings with signage and variations in pavement materials.

(5) Shade. Pedestrian walkways shall provide intermittent shaded areas when the walkway exceeds 100 linear feet. A minimum ratio of 100 square feet of shaded area per every 100 linear feet of walkway is required. Shade structures may be natural (canopy trees), manmade, or a combination of both.

(c) Pedestrian waterfront walkway. Undeveloped waterfront property shall provide an eight-foot wide pedestrian walkway adjacent to the seawall. The walkway shall be provided either along the landward side of the seawall in the form of a hardscape walkway, or along the waterway side of the seawall in the form of a parallel dock. The walkway provided along the landward side of the seawall shall be constructed with natural or natural looking materials (brick pavers, cobble stone, stamped concrete, or a combination of both). The walkway provided along the waterway side of the seawall shall be constructed with wooden piles, natural or natural looking deck materials (wood, or recycled material with natural wood look) and pile mounted lighting. The wood decking shall be constructed even with the height of the seawall cap. (See illustration 5.3, on file in the office of the city clerk.) Developed and redeveloping waterfront property is also encouraged to provide an eight-foot wide pedestrian walkway along the seawall in accordance with this article. Incentives for providing waterfront pathways shall be two parking credits and a five-foot reduction to the rear yard setback for principal structures. These incentives shall be administratively granted.

(Ord. No. 02-06, § 5, 1-22-2002; Ord. No. 10-10, § 2.3., 8-16-2010)

Sec. 30-626. - Renovations and redevelopment of existing commercial buildings and projects.

(a) Renovations and redevelopment. The provisions of this article shall apply to additions or renovations to, or development of an existing commercial building or project where: The cost of such addition, renovation, or redevelopment, or the cumulative or combined costs of such additions, renovations, or redevelopment over any consecutive five-year period, exceed 50 percent of the assessed value of the existing structure(s); or the addition, renovation or redevelopment, or the cumulative or combined additions, renovations, or redevelopment of the building or project over any consecutive five-year period, constitute(s) 20 percent or more of the square footage of the existing structure(s) prior to the commencement of such addition(s), renovation(s), or redevelopment. The provisions of this article shall apply when the addition, renovation or redevelopment are made on the owners own volition.

(b) Building and site improvements. A preapplication meeting shall be conducted with the community development director or designee for all new construction, reconstruction, alteration, rehabilitation, demolition of buildings and appurtenances or other such work.

(c) Minor changes or renovations. Minor repairs to an existing building exterior may be completed without compliance to these standards.

(d) Compliance required. However, changes or renovations such as painting the exterior of a building; roof, door, window, awning, and landscaping installation or replacement; or other similar activity shall require compliance with the appropriate section(s) of this article.

(e) Discontinuance. Where the use of a structure ceases for any reason, except where governmental action impedes access to the premises, for a period of more than 365 consecutive days, the provisions of this article which may require structural alterations shall be adhered to prior to re-

occupancy of the structure. With respect to off-street parking, vehicular use, drainage, and required on-site landscaping, the provisions of this article shall apply to the greatest extent possible where the use of a structure ceases for any reason, except where governmental action impedes access to the premises.

(Ord. No. 02-06, § 6, 1-22-2002)

Sec. 30-627. - Submittal requirements for architectural and site design plans.

Required plans (two sets): Submitted plans shall include the following:

(1) Plan(s) signed and sealed by a registered architect;

(2) Elevations (all sides): Elevations to be rendered (colored);

(3) Roof plan;

(4) Building plan;

(5) Typical wall section(s) with materials called out;

(6) Details (details shall be sufficient to explain any miscellaneous items);

(7) Roof material sample(s);

(8) Paint samples (trim(s) and base);

(9) Unified sign plan;

(10) Site development plan;

(11) Landscape plan;

(12) Irrigation plan;

(13) Site lighting plan;

(14) Any other drawing, details or other information needed to show how the project meets the requirements of this section. Scale for drawings, details or other information needs to be in a scale that is sized appropriately. The community development department reserves the right to request additional information if needed.

(Ord. No. 02-06, § 7, 1-22-2002)

Sec. 30-628. - Architectural overlay districts 1—4.

The purpose of the architectural overlay districts (1—4) is to encourage development in conformance with the city's comprehensive plan, the future land use map, and city zoning map; to promote and enhance the Island's small town character and prominent styles of architecture; with the intent to develop pedestrian friendly, high qualify, commercial and mixed use projects. Exterior building colors and materials contribute significantly to the visual impact of a building, of which shall be well designed and integrated into a comprehensive design style for the project. The following information represents architectural styles, building materials and design standards for overlay districts one, two, three, and four:

(1) Overlay district one (town center mixed use district). The purpose of architectural overlay district no. 1 (see Exhibit A) is to encourage development in conformance with the intended character (Mediterranean, Polynesian, and Bermuda Island style, or a Southwest Florida Vernacular style) of the town center mixed use district; to provide incentives for redevelopment that is directed towards supporting pedestrian, bicycle and vehicular access; and to enhance the image and architectural attractiveness of commercial and mixed use development.

a. Minimum yard requirements: Front, rear, and side yard setbacks per existing commercial zoning regulation. For property located along a navigable waterway, landscaping provided along the side yard shall be preserved as a view corridor, maintained at three feet and below for shrubs and above seven feet for canopy trees. (See illustration 8.1.1, on file in the office of the city clerk.)

b. Elkcam Circle Zoning Overlay: Reserved.

c. For exterior building materials and style standards see supplemental illustration 8.1.3, on file in the office of the city clerk.

(2) Overlay district two (Collier Boulevard pedestrian tourist subdistricts (north and south), Barfield subdistrict and community center subdistrict). The purpose of architectural overlay district no. 2 (see overlay district exhibits two—a., two—b., two—c., and two—d. is to encourage development in conformance with the intended character (Mediterranean and Bermuda Island style, or a Southwest Florida Vernacular style) of the Collier Boulevard pedestrian tourist subdistrict, Barfield subdistrict, and community center subdistrict; to provide incentives for redevelopment that is directed towards supporting pedestrian, bicycle and vehicular access; and to enhance the image and architectural attractiveness of commercial development in overlay districts two—a. and two—d., and mixed use development in overlay districts two—b. and two—c.

a. Minimum yard requirements: Front, side, and rear per existing commercial zoning regulation.

b. For exterior building materials and style standards see supplemental illustration 8.2.2, on file in the office of the city clerk.

(3) Overlay district three (Marco Lake subdistrict). The purpose of architectural overlay district no. 3 (see Exhibit C) is to encourage development in the Marco Lake subdistrict, to provide incentives for redevelopment that is directed towards supporting pedestrian, bicycle and vehicular access; and to enhance the image and architectural attractiveness of commercial and mixed use development.

a. Minimum yard requirements: Front, rear, and side yard setbacks per existing commercial zoning regulation.

b. For exterior building materials and style standards see supplemental illustration 8.3.2, on file with the city clerk.

(4) Overlay district four (village commercial district). The purpose of architectural overlay district no. 4 (see Exhibit D) is to encourage development in conformance with the intended character (Old Florida and Victorian/Key west style, or Southwest Florida Vernacular style) of the village commercial district; to provide incentives for redevelopment that is directed towards supporting pedestrian, bicycle and vehicular access; and to enhance the image and architectural attractiveness of commercial and mixed use development.

a. Minimum yard requirements: Front, rear, and side yard setbacks per existing commercial zoning regulation.

b. For exterior building materials and style standards see supplemental illustration 8.4.2, on file with the city clerk.

OVERLAY DISTRICT ONE
(Mediterranean, Polynesian and Bermuda Island style)

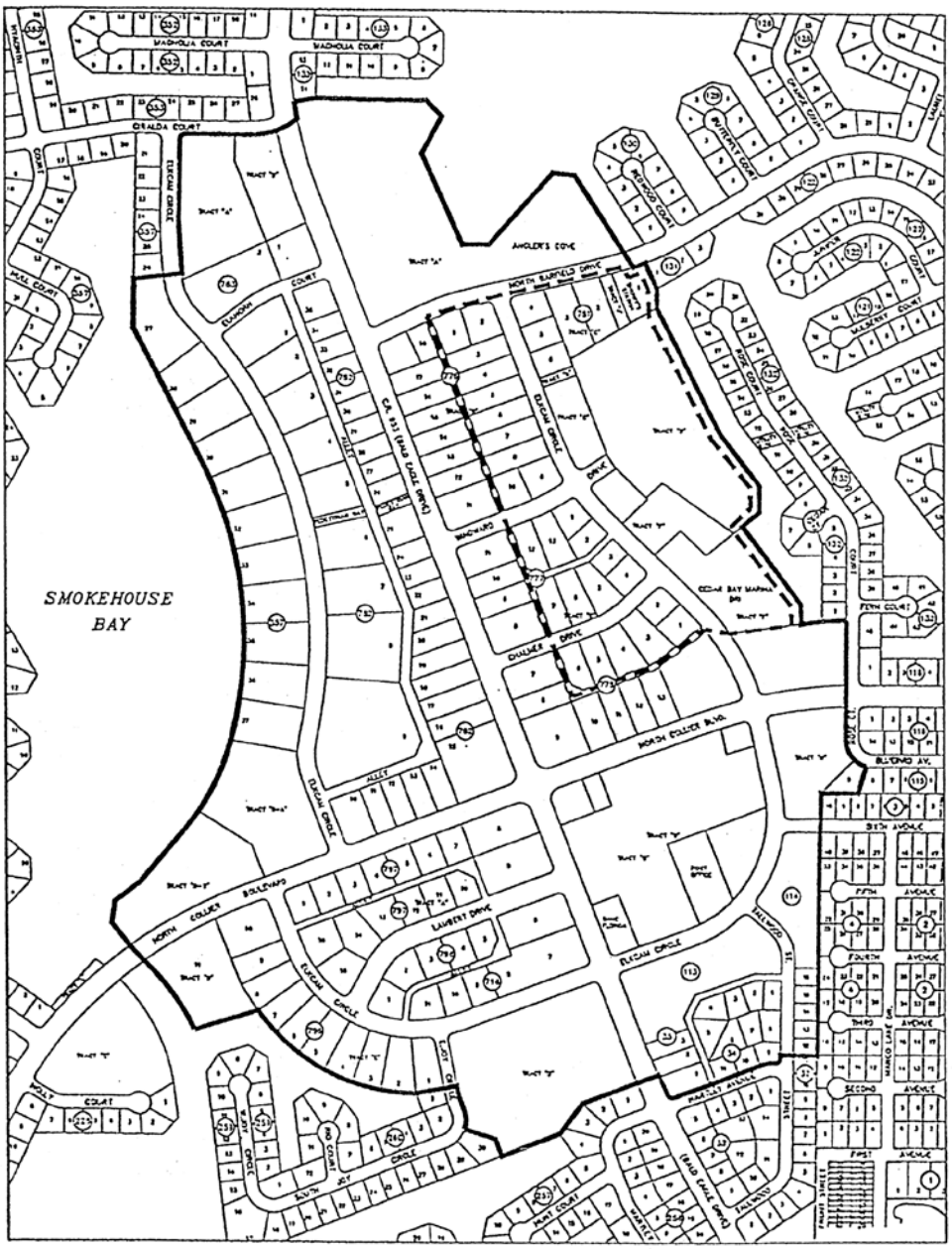

TOWN CENTER MIXED USE DISTRICT ————————

ELKCAM CIRCLE ZONING OVERLAY - - - - - - - -

OVERLAY DISTRICT TWO - a.
(Mediterranean and Bermuda Island style)

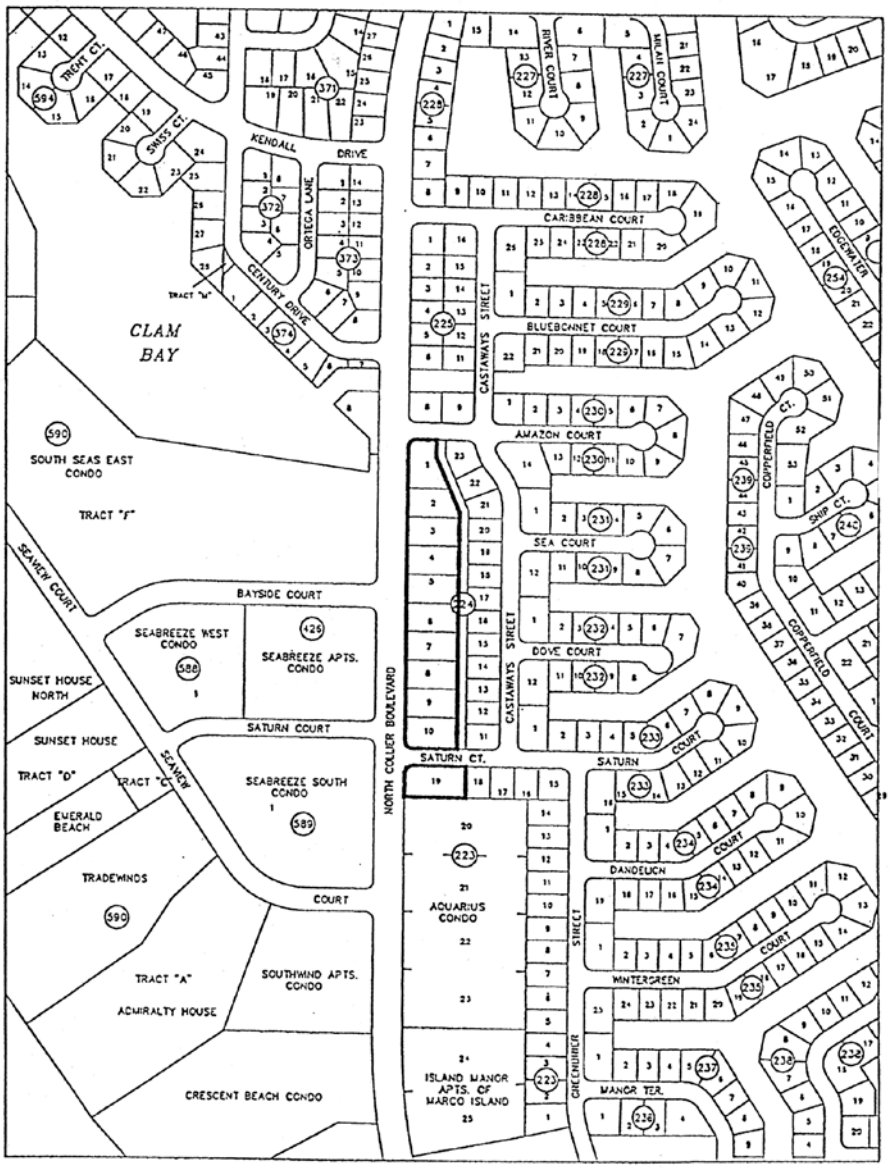

COLLIER BOULEVARD PEDESTRAIN TOURIST SUBDISTRICT (NORTH SECTION)

OVERLAY DISTRICT TWO - b.
(Mediterranean and Bermuda Island style)

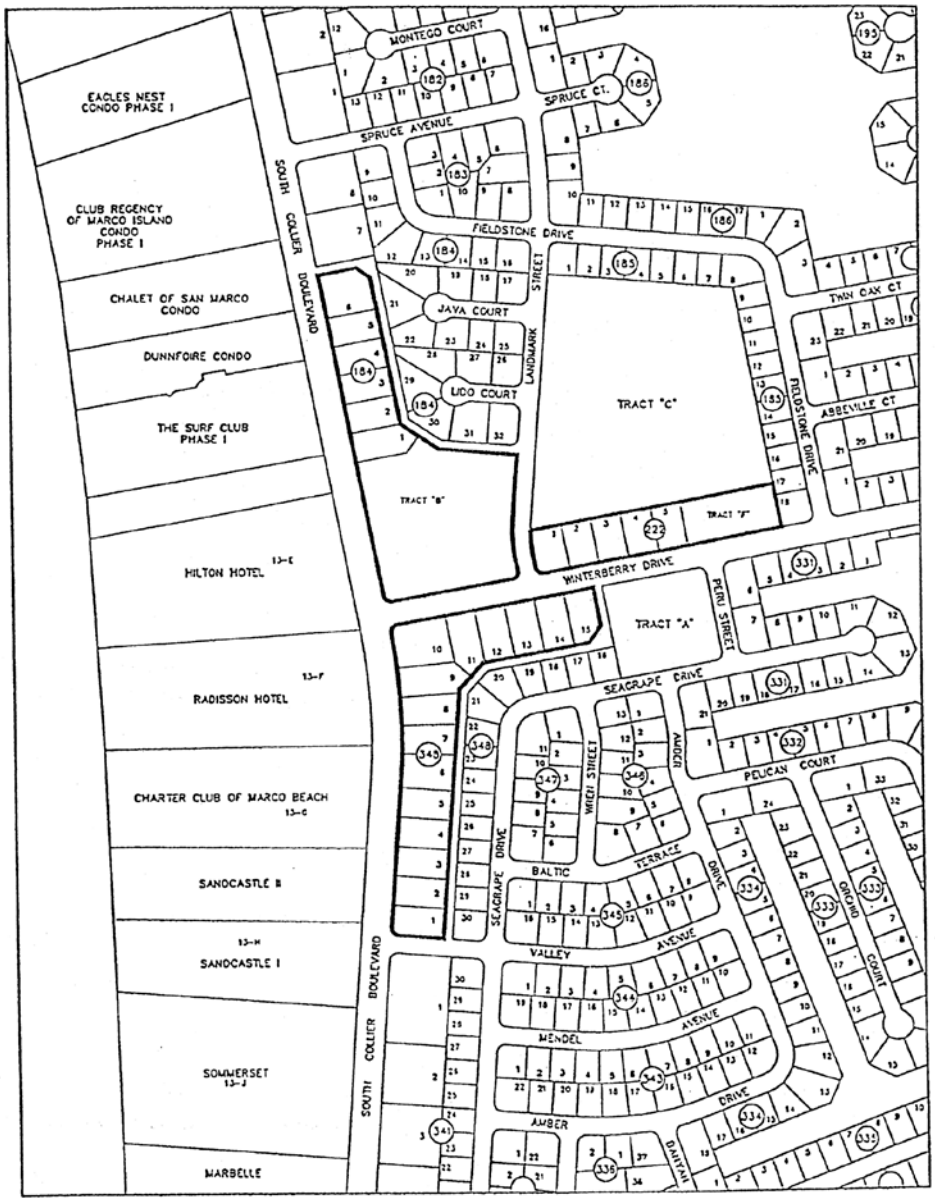

COLLIER BOULEVARD PEDESTRIAN TOURIST SUBDISTRICT (SOUTH SECTION)

OVERLAY DISTRICT TWO - c.
(Mediterranean and Bermuda Island style)

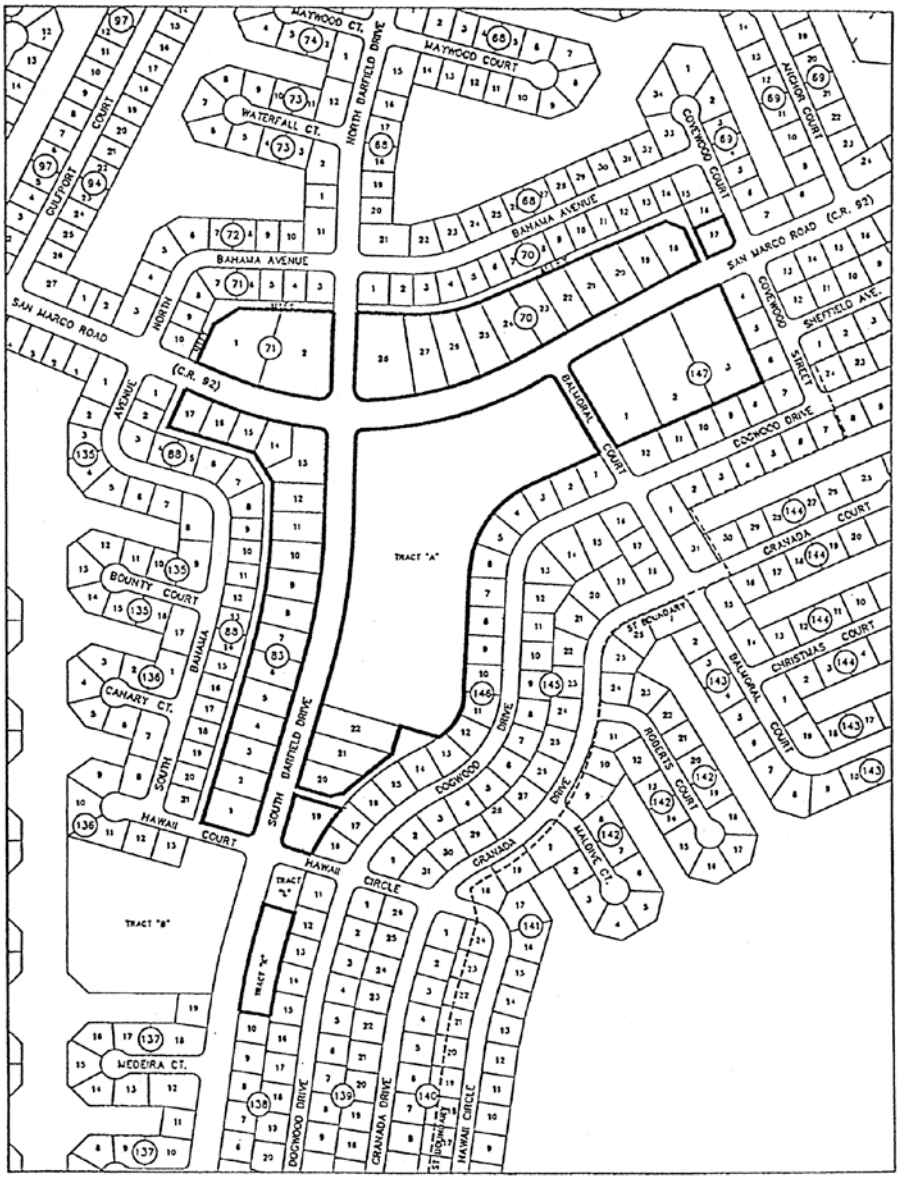

BARFIELD SUBDISTRICT

OVERLAY DISTRICT TWO - d.
(Mediterranean and Bermuda Island style)

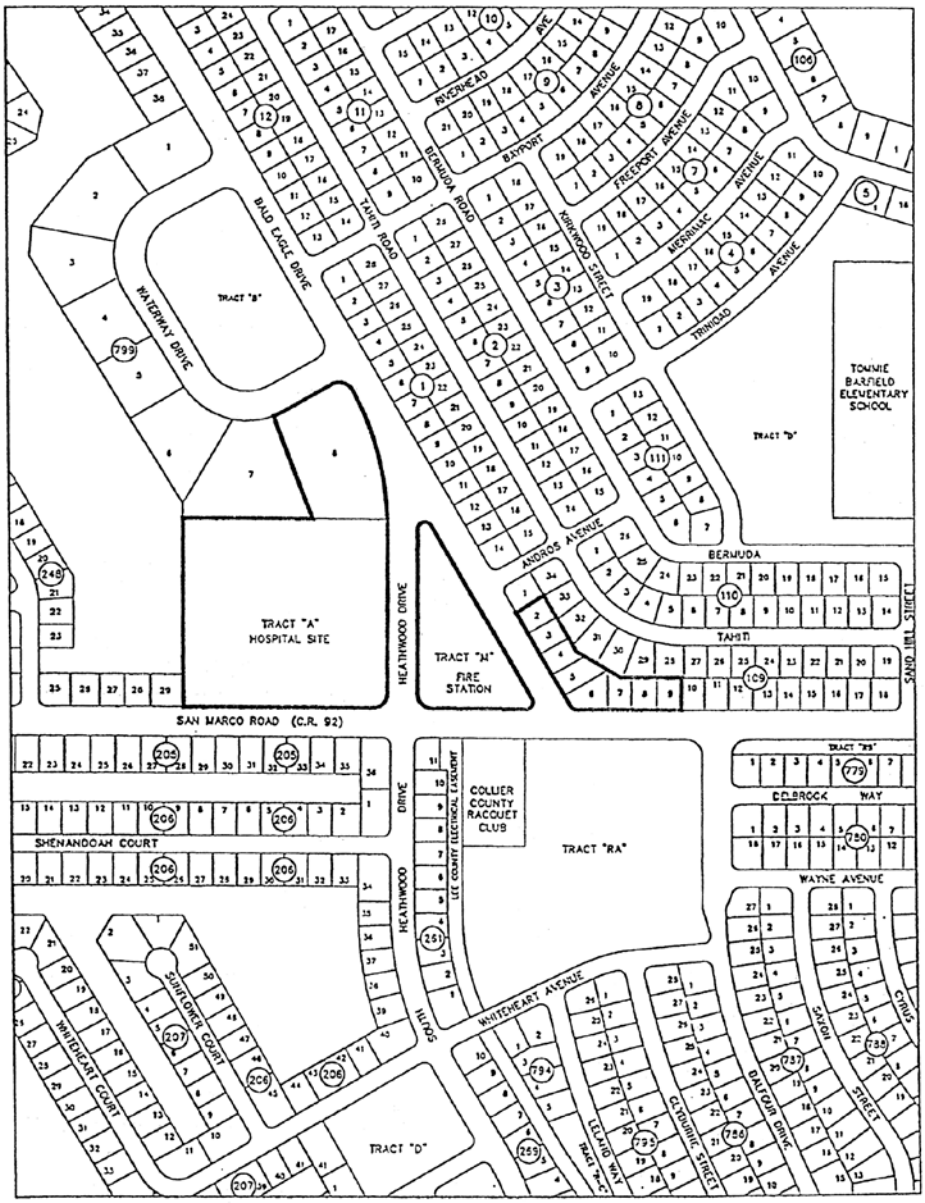

COMMUNITY CENTER SUBDISTRICT

OVERLAY DISTRICT THREE

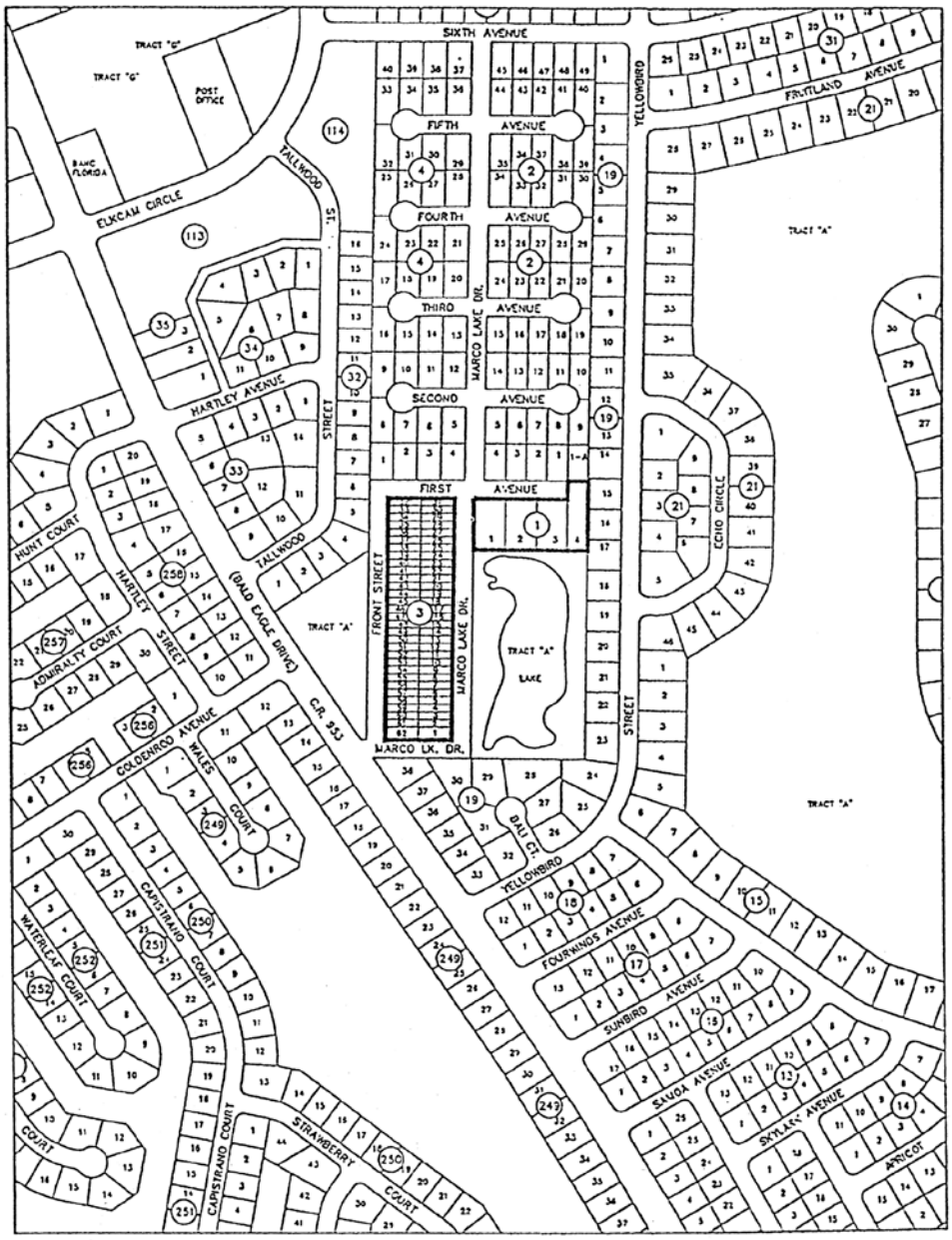

MARCO LAKE SUBDISTRICT

OVERLAY DISTRICT FOUR
(Old Florida and Victorian/Key West style)

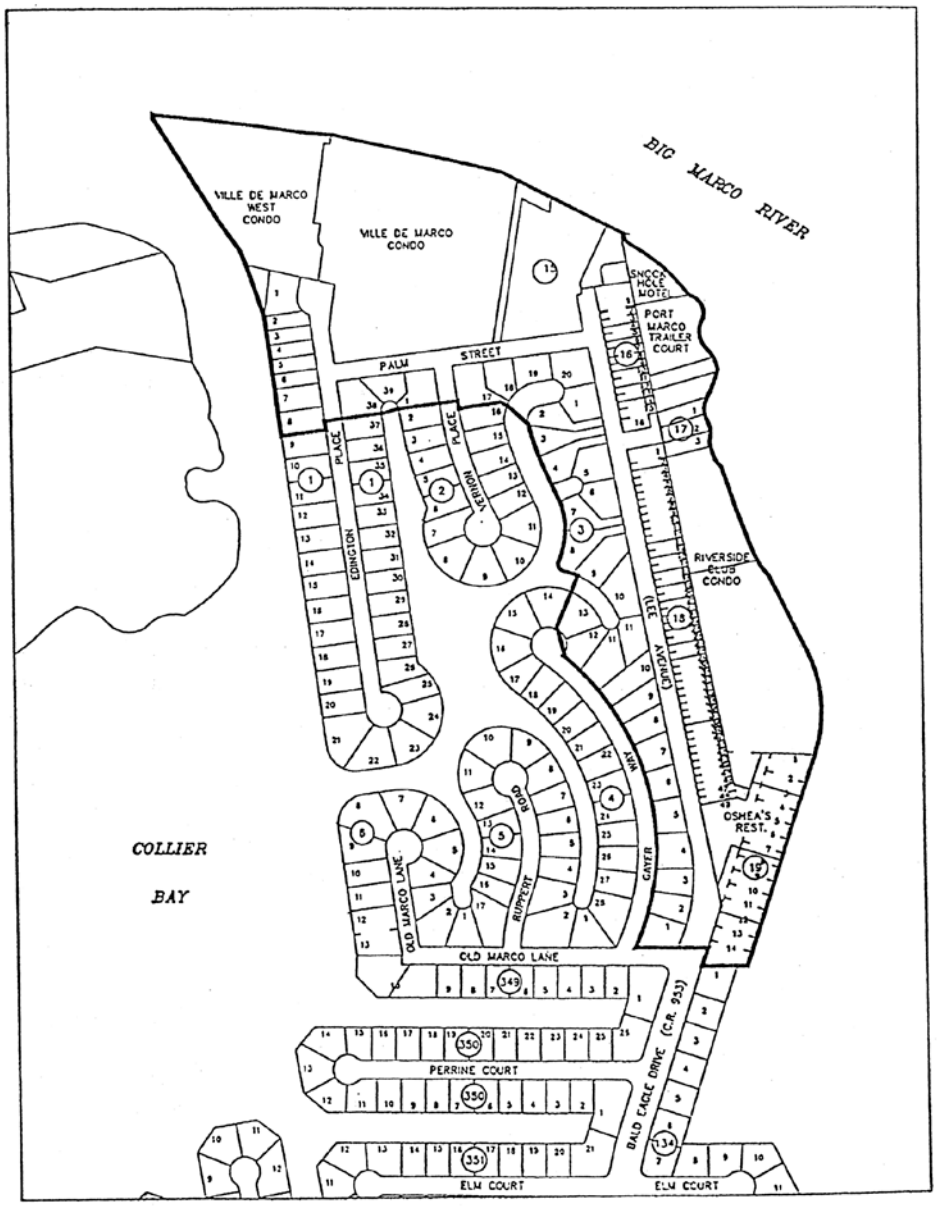

VILLAGE COMMERCIAL SUBDISTRICT

(Ord. No. 02-06, § 8, 1-22-2002; Ord. No. 06-10, § 5, 8-21-2006; Ord. No. 07-01, § 3, 1-22-2007)

Sec. 30-629. - Definitions.

[The following words, terms and phrases, when used in this article, shall have the meanings ascribed to them in this section, except where the context clearly indicates a different meaning:]

Assessed value means the worth or value of a structure(s) established by taxing authorities on the basis of which the tax rate is applied.

Build-to line means a line established by the regulating plan where the facade of a building must be located.

Building footprint means the total area of land covered or occupied by an individual building, including all roofed areas, whether habitable or non-habitable.

Cumulative means increasing or growing by accumulation or successive additions during a five-year period.

Facade means the entire vertical exterior surface of a building, which is set parallel to a frontage line.

Frontage or frontage line means the lot line that coincides with an adjoining street tract or right-of-way.

Glazing means the opening in a door or window that receives glass or other translucent material.

Individual parking lot means a discrete parking lot with no more than two ingress/egress points, limited to a maximum of 60 parking spaces, and surrounded by a landscape buffer with a minimum depth of five feet.

LDC means the land development code (LDC).

Loggia means a roofed arcade or gallery with one side open to the air.

Main street development means all buildings on the site are located adjacent to a street. Main access to the building(s) is located along the street.

Mixed use means a development/project consisting of commercial uses on the first floor, commercial and/or residential uses on the second floor, and residential uses on the third and remaining floors. All mixed-use projects shall have a residential component as part of the project.

Parapet means a low protective wall at the edge of a terrace, balcony or roof.

Porch means a roofed structure at the entrance to a building or an open room on the outside of a building.

Prototype means any building that has been designed and used more than once without substantial change. Substantial changes shall be defined as exceeding 50 percent of plan and/or elevations.

Sign band means a continuous horizontal band or area on the facade of a building in which signage shall be located.

Storefront means the wood or metal armature of a window or door system, located within a ground-floor opening in the facade of a building.

Story means a habitable floor level within a building, no more than 14 feet high from floor to ceiling.

Streetscape means the elements that make up the character of a particular street. These include, but not limited to the landscaping, lighting, street furniture, buildings and materials.

Street wall means an opaque wall between 2.5 to 3.5 feet in height aligned with the facade of an adjacent building with the purpose of masking parking from the street. An opaque hedge may be substituted for a street wall, subject to the height requirements.

(Ord. No. 02-06, § 9, 1-22-2002)

Sec. 30-630. - Violations.

No building permit or certificate of occupancy shall be issued except in compliance with the approved architectural and site design regulations for commercial buildings and projects. Violation of the terms identified in the architectural and site design regulations shall constitute a violation of this article.

(Ord. No. 02-06, § 10, 1-22-2002)

Secs. 30-631—30-670. - Reserved.

ARTICLE IX. - SITE DEVELOPMENT AND SITE IMPROVEMENT PLAN STANDARDS

Sec. 30-671. - Intent and purpose.

The intent of this article is to ensure compliance with the appropriate land development code regulations prior to the issuance of a building permit.

This article is further intended to ensure that each proposed development complies with fundamental planning and design principles such as: consistency with the city's comprehensive plan; compliance with the city's roadway level of service standards and the traffic circulation system, including driveways, traffic calming devices, parking areas and access management provisions; strategic layout and arrangement of buildings, architectural design and open spaces; sufficient availability and adequate capacity of drainage and utility facilities; and compatibility and transition with adjacent development within the jurisdiction of the city and consideration of natural resources and proposed impacts thereon.

It is further the purpose of this article to provide minimum standards and procedures for the review of new construction projects and redevelopment under the site development plan (SDP) review process, and for expansion/renovation of existing developments under the site improvement plan (SIP) review process.

(Ord. No. 01-37, § 1, 12-3-2001; Ord. No. 14-04, § 2, 4-21-2014)

Sec. 30-672. - Applicability and exceptions.

All development, except as otherwise provided herein, is subject to the provisions of this article. The provisions of this article shall not apply to the following land use activities and represents the sole exceptions thereto:

(1) Single-family detached and two-family housing structure(s) on a lot(s) of record.

(2) Underground construction consisting of utilities, communications and similar underground construction activities within the public right-of-way and/or recorded easements.

(3) Accessory and ancillary facilities for a golf course such as restrooms, irrigation systems, and pump houses.

(4) Construction trailers and storage of equipment and materials following issuance of a building permit for the use to which said activities are a function of.

(5) Model homes and sales centers.

(6) Project entryway signs, walls, gates and guardhouses.

While the above land use activities shall be exempt from the provisions of this article, said land use activities are subject to all other provisions of the land development code and other city regulations, such as, but not limited to, landscaping, tree removal, development standards and the submission requirements attendant to obtaining temporary use permits/approvals and building permits.

(Ord. No. 01-37, § 2, 12-3-2001; Ord. No. 14-04, § 2, 4-21-2014)

Sec. 30-673. - Site development plan and site improvement plan submittal requirements.

The planning board shall review and make a recommendation to the city council who shall review and make the final decision on all site development plans and site improvement plans in accordance with the following standards and/or submittal requirements:

(1) Documentation shall be provided to evidence ownership and control of the property and the development, as well as information regarding easements and related encumbrances. Documents will substantiate the use and permanent maintenance of common open space, common facilities, conservation/preservation areas, and other similar common lands in order to ensure the preservation of such lands and facilities, so as not to create future liability unto the city.

(2) Development compliance with all appropriate zoning regulations and the comprehensive plan. Ingress and egress to the proposed development and its proposed improvements shall include provisions and designs for vehicular and pedestrian safety, separation of vehicular traffic from pedestrian and other traffic, traffic flow and control, traffic calming devices, provision of private and/or public utilities and refuse collection, and access in case of fire, catastrophe or other emergency. Moreover, ingress and egress to development projects and along city roadways shall be in conformance with the current county or city access management ordinance and practices and criteria promulgated by the state department of transportation.

(3) The location and relationship of parking and loading facilities shall complement and optimize traffic conditions on city streets. Internal traffic patterns within the proposed development shall include provisions for vehicular and pedestrian safety, traffic flow and control, access in case of fire or catastrophe, screening and landscaping.

(4) Adequacy of proposed or required recreational facilities and open spaces considering the size, location, and development of these areas with regard to effect on adjacent and nearby properties as well as uses within the proposed development, and the relationship to community-wide open spaces and recreation facilities.

(5) Adequacy of proposed landscape screens and buffers considering preservation of the development's internal land uses as well as compatibility with adjacent land uses.

(6) Water management master plan or stormwater provisions and designs on the property, considering adverse impacts on adjacent and nearby properties and the consequences of such water management master plan or stormwater discharges on overall city drainage capacities within and external to private and public drainage easements and alley and road right-of-way. Water management areas shall be required to be maintained in perpetuity by the property owner or assigned legal entity(ies) according to the approved plans. Water management areas not maintained shall be corrected according to approved plans within 30 days. The engineer of record, prior to final acceptance of constructed improvements by the city, shall provide documentation from the stormwater maintenance entity clearly evidencing that said entity has been provided information on how the stormwater system(s) functions and indicating responsibility for maintenance of the system(s).

(7) Signage proposed for the project shall be in conformity with the sign code and a unified sign permit application shall be included with the submittal packet for the site development or site improvement plan.

(8) Architectural design of the building(s) for all commercial and multi-family developments shall meet applicable city codes and regulations.

(9) Such other standards as may be imposed by this article, the comprehensive plan or other applicable regulations for the particular use or activity proposed.

(Ord. No. 01-37, § 3, 12-3-2001; Ord. No. 14-04, § 2, 4-21-2014)

Sec. 30-674. - Site development plan (SDP) submittal and review procedures.

A pre-application meeting shall be conducted by the city manager or designee prior to the submission of a site development plan for review. The site development plan submittal packet shall include the following, unless waived by the city manager or designee at the pre-application conference:

(1) Site development plan. A site development plan shall be prepared by a registered professional architect or engineer licensed in the state on standard size sheets measuring 24 inches by 36 inches drawn to scale and setting forth the following information when applicable along with supporting documentation:

a. The project title and the name, address, fax and phone number of the firm or agent preparing the plans and the name, address, fax and telephone number of the property owner(s).

b. A copy of the deed, or purchase/sale contract, or a notarized statement of ownership acceptable to the city clearly demonstrating ownership and control of the subject lot or parcel of land. The following disclosure on interest information shall also be provided for the following types of ownership:

1. If the property is owned fee simple by an individual, tenancy by the entirety, tenancy in common, or joint tenancy, list all parties with an ownership interest, as well as percentage of such interest.

2. If the property is owned by a privately held corporation, list the officers and stockholders and the percentage of stock owned by each.

3. If the property is owned by a publicly held corporation, list the officers and any stockholder owning or controlling five percent or more of such corporate stock.

4. If the property is in the name of a trustee, list the beneficiaries of the trust with the percentage of interest for each beneficiary.

5. If the property is in the name of a general or limited partnership, list the name of the general and/or limited partners.

6. If the property is in the name of a limited liability company, list each of the members of the LLC and the percentage of interest.

7. If there is a contract for purchase, list the names of the contract purchasers in accordance with each of the entity requirements above.

8. If any contingency clause or contract terms involve additional parties, list all such additional parties in accordance with the entity requirements above.

c. Zoning designation and land uses on the proposed development project and adjacent properties.

d. North arrow, scale and date.

e. Vicinity map clearly identifying the location of the development and its relationship to the surrounding community.

f. A narrative statement on the plan identifying the provisions of ownership and maintenance of all common areas, open space, private streets and easements.

g. A summary of project component areas in chart form which shall include the following:

1. Total site acreage.

2. Total square footage of each category or type of pervious and impervious areas (including all parking areas, drive-aisles, and internal streets) and its percentage of the total site area. Site development plan submittals shall also include surface area computations and hydraulic calculations for improvements within public road and alley right-of-way to the extent deemed necessary by the city.

3. Total square footage of landscape area/open space and its percentage of the total site area.

4. For residential projects, total number of units, units per acre, and a unit breakdown by square footage and number of bedrooms. (List on plans).

5. For nonresidential projects, total building footage and a square footage breakdown by use (i.e., office, retail, storage, etc.) and its percentage of the total building. (List on plans).

6. All required and provided setbacks and separations between buildings and structures in matrix form shown on the plans.

h. A parking summary in matrix form shown the plans which shall include:

1. Type of use.

2. Total square footage per use.

3. Required parking ratio.

4. Number of spaces required per use.

5. Number of spaces provided per use.

6. Total number of required and provided spaces including regular and handicapped spaces.

i. The following information must be included in the SDP submittal packet:

1. Pertinent information concerning the building code such as the type of construction, number of stories, total square footage under roof, occupancy/use and fire sprinkler systems for all proposed structures so that a required fire flow may be determined in accordance with Section 1141 of the National Fire Protection Association (NFPA).

2. A fire hydrant flow test report from the applicable fire district for the closest hydrant(s) to the project shall be submitted so that the available fire flow may be determined pursuant to NFPA 1141.

j. Illustrative and design information accurately depicted on the site development plan shall be as follows:

1. A boundary survey, prepared, and signed and sealed by a professional land surveyor, showing the location and dimensions of all property lines, existing streets or roads, easements, rights-of-way, ground elevations, and areas dedicated to the public.

2. Name, alignment and existing/proposed rights-of-way of all streets which border the development (including raised islands, striping, right/left turn lanes, median cuts and nearby intersections), and the location of all existing driveways or access points on the opposite sides of all streets which border the development, and the location of all traffic calming devices.

3. Submittal of a traffic impact statement and/or an access management study or analysis. Location and configuration of all development ingress and egress points shall be included in the submittal and shown on the plans.

4. Location and arrangement of all proposed buildings (including existing buildings that are to remain).

5. Location and configuration of all parking and loading areas.

6. Name, alignment and existing/proposed right-of-way of all internal streets and alleys.

7. Traffic circulation plans for on-site improvements and traffic engineering studies for off-site and on-site improvements, as warranted or determined by the city. Directional movement of internal vehicular traffic and its separation from pedestrian traffic.

8. Location and configuration of recreational facilities (including related buildings, golf course areas, tennis courts, pools, etc.).

9. Location and general configuration of all stormwater and drainage retention/detention areas as well as all existing and proposed easements, and water and sewer lines intended to serve the development. Stormwater management calculations for on-site and off-site drainage discharges shall be submitted and/or shown on the plans.

10. Location, general configuration, and topography of natural features as preservation/conservation areas, water bodies, and wetlands.

11. Provide the FEMA flood zone from the current FIRM (flood insurance rate map).

12. Location of emergency access lanes, fire hydrants and fire lanes.

13. Location of all handicapped parking spaces.

14. Location of trash and recycling enclosures.

15. Location and heights of proposed walls or fences.

16. Accurate dimensions which include the following:

    i. All building setbacks.

    ii. Distance between buildings, accessory structures, and property boundaries.

    iii. Width of all internal streets.

    iv. All parking areas and drive-aisles.

    v. Landscape areas adjacent to all vehicular drives, interior property lines and all parking areas.

17. Any additional relevant information as may be required by the community development director.

(2) Architectural plan. For projects subject to the provisions of the architectural and site design guidelines of the land development code, five sets of architectural drawings, signed and sealed by a registered architect in the state, shall be provided. Representations on design matter shown on the site development plan shall become conditions of approval. Architectural drawings submitted in conjunction with an application for a building permit shall be consistent with the architectural drawing(s) submitted and approved for the site development plan or site improvement plan.

(3) Landscaping plan. A landscape plan signed and sealed by a qualified licensed architect or landscape architect registered in the state, shall contain the following information:

a. Landscape summary. A landscape summary in matrix form which shall include:

1. Graphic symbol to indicate each type of plant material.

2. Botanical name.

3. Common name.

4. Total number of each type of plant material.

5. Height and spread of each type of plant material.

6. Spacing of each type of plant material.

b. Illustrative and design information. Illustrative and design information consisting of the following shall be accurately depicted on the landscape plan:

1. The location, configuration and arrangement of all proposed buildings, internal streets and parking areas as reflected on the site development plan.

2. The location and dimensions of all proposed landscaped areas with appropriate graphic symbols including existing trees that are being credited toward the development's landscaping requirements.

3. Location and configuration of all special or textured paving areas.

4. Provisions for site irrigation.

5. Complete landscape and irrigation designs, calculations, and specifications.

6. Any additional relevant information as may be required by the city manager or designee.

(4) Vegetation inventory. A generalized vegetation inventory of the property shall be required to the extent necessary, as determined at the pre-application meeting, indicating the approximate location, densities and species of the following:

a. Upland, wetland and estuarine vegetation including prohibited exotic vegetation, mapped using FLUCCS terminology.

b. Any type of vegetation identified for preservation.

c. Provide a survey of identifying species and locations on a current aerial photograph at a scale of one inch equals 200 feet or larger or superimposed on the site plan, and also include the following:

1. Plants specified to remain in place or to be transplanted to other locations on the property as specified in the applicable development order.

2. Specimen trees designated by the city manager or designee.

3. State or federal rare, threatened or endangered plant species shall be surveyed and shown on the plans according to accepted Florida Game and Freshwater Fish Commission or U.S. Fish and Wildlife criteria and methodology.

4. Existing trees that may be credited toward the development's landscaping requirements.

(5) Aerial photo. A recent aerial photo shall be provided at the same scale as the plan delineating the development boundaries.

(6) Infrastructure improvement plans and related documents. Detailed on-site and off-site infrastructure design/improvement plans and construction documents shall be submitted in conformance with the design standards of this code and current city ordinances, regulations, policies and procedures which consist of, but are not limited to, the following items:

a. Improvements for water and sewer service.

b. Improvements for motor vehicle and traffic circulation, ingress and egress, parking and other transportation needs, including traffic calming devices.

c. Non-motorized traffic circulation including sidewalks and bicycle facilities. Non-motorized circulation is defined as movement by persons on foot, bicycle or other human-powered device.

d. The removal of existing unlawful or unnecessary obstructions in the public right-of-way shall be included in the plans, including provisions for safe and convenient street crossings. Sidewalk and bike path designs, particularly at intersections, shall be in accord

with city design standards and criteria established by the state department of transportation and provisions of the American Disability Act.

e. Curb ramps shall be provided for sidewalks and bike paths at each street corner of an intersection. Curb ramps shall be a minimum of 36 inches in width and shall not rise at a ratio greater than that specified by the state accessibility code for building construction. Design criteria for curb ramps by the state department of transportation shall govern.

f. Crosswalks shall be required at any intersection where the distance to the nearest crosswalk is greater than 1,000 feet. Mid-block pedestrian crossings shall be appropriately signed, marked, and signalized as directed by the city's public works director.

g. Improvements for water management facilities shall be designed in full compliance with South Florida Water Management District rules, F.A.C. chs. 40E-4, 40E-40 and 40E-41. Additionally, drainage calculations and studies shall be required on a project-by-project basis as determined by the public works director so as to determine adverse impacts to downstream receiving drainage systems and the need to expand and improve on existing downstream drainage facilities.

h. Written technical specifications shall be submitted for all proposed infrastructure and site improvements to be performed. Such specifications shall be signed and sealed by a licensed engineer.

i. Engineering design computations and reports for water, sewer, roads and water management facilities, as required by the city and/or by federal, state and local laws and regulations. Such design computations and reports shall be signed and sealed by a licensed engineer.

j. Topographical map of the property which shall include the following:

1. Existing features, such as, watercourses, wetlands, drainage ditches, lakes, marshes.

2. Existing contours or representative ground elevations at spot locations and a minimum of 50 feet beyond the property line.

3. Benchmark locations and elevations (NAVD).

k. Site clearing and grubbing plan and method of vegetation disposal.

l. Sidewalks, bike lanes and bike paths. For all projects required to be developed through the site development plan process, the developer shall be required to construct or reconstruct on site within the development and/or within the public right-of-way sidewalks. Sidewalks shall be of a width and material appropriate for the project under review, and shall be constructed contiguous to public and private roadways that are adjacent to and internal to the site.

m. For off-site drainage discharges that exceed predevelopment flows, a drainage connection permit may be required from the city manager or designee.

(Ord. No. 01-37, § 4, 12-3-2001; Ord. No. 10-10, § 2.4., 8-16-2010; Ord. No. 14-04, § 2, 4-21-2014)

Sec. 30-675. - Permits.

All necessary permits and necessary applications requiring city approval and other permitting and construction related items, including but not limited to the following, shall be submitted and approved with the site development plan:

(1) State department of environmental protection water and sewer facilities construction permit application.

(2) Excavation permit application.

(3) State department of transportation utilities construction application and/or rights-of-way construction permits.

(4) City right-of-way permit at the time of building permit approval.

(5) Blasting permit prior to commencement of any blasting operation.

(6) South Florida Water Management District permit, if required. Additionally, a general permit for drainage and stormwater management improvements shall be issued by the city prior to any site development plan approvals.

(7) Interim wastewater and/or water treatment plant construction or interim septic system and/or private well permits prior to building permit approval.

(8) Any additional state and federal permits which may be required prior to commencement of construction, addressing the impacts on jurisdictional wetlands and habitat involving protected species.

(9) All other pertinent data, computations, plans, reports, and the like necessary for the proper design and construction of the development that may be submitted.

(10) All necessary performance securities required by city ordinances in effect at the time of construction.

(Ord. No. 01-37, § 5, 12-3-2001; Ord. No. 14-04, § 2, 4-21-2014)

Sec. 30-676. - Amendments.

Any proposed change or amendment to a previously approved site development plan shall be subject to review and approval by the city council after a recommendation is made by the planning board. The city council may by resolution delegate the approval of insubstantial amendments to the city manager or designee.

(Ord. No. 01-37, § 6, 12-3-2001; Ord. No. 14-04, § 2, 4-21-2014)

Sec. 30-677. - Site improvement plan (SIP) review procedures.

A pre-application meeting shall be conducted by the city manager or designee prior to the submission of a site improvement plan for review. Submittal of a site improvement plan may be reviewed under the site improvement plan (SIP) review process if the development proposal meets all of the following conditions:

(1) The project involves a site which is currently improved with principal structures, parking facilities, water, septic/sewer services, and defined ingress/egress.

(2) The proposed use will not require a substantial expansion or modification of the existing impervious areas to a degree which would require a formal engineering review or otherwise affect on-site surface water management facilities as may be documented by waiver letters from the South Florida Water Management District or the city public works director where applicable.

(3) Written documentation from appropriate agencies acknowledging that water and sewer services are available at the site and are adequate to serve the proposed use.

(Ord. No. 01-37, § 7, 12-3-2001; Ord. No. 14-04, § 2, 4-21-2014)

Sec. 30-678. - Site improvement plan submittal requirements.

(a) Site improvement plan submittal packet. A pre-application meeting shall be conducted by the city manager or designee prior to the submission of a site improvement plan.

(b) Site improvement plan. A site improvement plan (SIP) shall be prepared by a professional engineer licensed in the state on a 24-inch by 36-inch sheet drawn to scale and setting forth the following information:

(1) The project title, property owner, fax, address and telephone number.

(2) Legal description, scale, and north arrow.

(3) Zoning designation of the subject site and adjacent sites and the proposed use of the subject site.

(4) Location, configuration and dimensions of all building and lot improvements.

(5) Location and configuration of parking and loading areas, and the directional movement of internal vehicle traffic.

(6) Location and dimension of access point(s) to the site.

(7) Parking summary in matrix form, indicating the required and provided parking for each existing and proposed use.

(8) Location and configuration of handicapped parking facilities and building accessibility features.

(9) Location, dimension and configuration of existing stormwater management and/or drainage facilities.

(10) Location of trash enclosures.

(11) Location of existing and proposed landscaping with specifications as to size, quantity and type of vegetation.

(12) All required and provided setbacks and separations between structures in matrix form.

(13) Any additional relevant information as may be required by the city manager or designee.

(Ord. No. 01-37, § 8, 12-3-2001; Ord. No. 14-04, § 2, 4-21-2014)

Sec. 30-679. - Time limits.

Approved site development plans shall remain in force for two years. If no development/actual construction has commenced within two years, the site development plan shall expire. A one-year extension may be granted for good cause shown upon written application submitted to the city manager or designee prior to expiration of the preceding approval. When extending the site development plan approval, the city manager or designee shall require the approval to be modified to bring the plan into compliance with any new provisions of this Code in effect at the time of the extension request.

(Ord. No. 01-37, § 9, 12-3-2001; Ord. No. 14-04, § 2, 4-21-2014)

Sec. 30-680. - Violations.

No building permit or certificate of occupancy shall be issued except in compliance with the approved site development plan. Violation of the terms identified in the approved site development plan shall constitute a violation of this Code.

(Ord. No. 01-37, § 10, 12-3-2001)

Secs. 30-681—30-710. - Reserved.

ARTICLE X. - CONCURRENCY MANAGEMENT

DIVISION 1. - GENERALLY

Sec. 30-711. - Purpose and intent.

The purpose of this article is to establish a management and monitoring system to evaluate and coordinate the timing and provision of necessary public facilities to service development pursuant to adopted LOS (level of service) standards, to establish a regulatory program that ensures that adequate public facilities are available to serve development concurrent with when the impacts of development occur on the public facilities.

(Ord. No. 02-09, § 1, 2-19-2002)

Sec. 30-712. - Conditions for concurrency.

Required facilities include any improvement or public facility which is required to maintain the prescribed LOS parameters to serve current city residents and projected new residents as a result of a given project. Required facilities for a proposed development shall be identified by the owner or developer and reviewed for concurrency by the city in compliance with the adopted comprehensive plan. Concurrency requirements for a proposed project will be met if any of the following three conditions are met for each of the level of service requirements for required facilities:

(1) Condition 1: Required facilities are in place at the time a development order is issued, or a development order is issued subject to the condition that the necessary facilities will be in place when the certificate of occupancy is issued.

(2) Condition 2: The required facilities are under construction at the time a development order is issued.

(3) Condition 3: The required facilities are the subject of a binding contract executed for the construction of those facilities at the time a development order is issued.

Notwithstanding anything in this section to the contrary, with respect to potable water, the sole condition will be the city's determination as to whether potable water supplied to serve the new development will be available no later than the anticipated date of issuance by the city of a certificate of occupancy or its functional equivalent.

(Ord. No. 02-09, § 2, 2-19-2002; Ord. No. 10-06, § 2.1., 6-7-2010)

Sec. 30-713. - Conditions for suspension of development order.

A development order issued with any of the conditions listed in section 30-712 shall not be granted a certificate of occupancy unless the required facilities are in place, or without a recommendation from the planning board and city council approval.

(Ord. No. 02-09, § 3, 2-19-2002)

Sec. 30-714. - Responsibility for implementation.

(a) The community development department shall coordinate the implementation strategy for purposes of this article and will annually provide the city manager with the following:

(1) Current population projections for a five-year period;

(2) Building permit activity for the past five years;

(3) Annual level of service report; and

(4) Additional information as requested.

(b) The building official shall utilize 2.16 as the standard for calculating "persons per dwelling unit" for residential structures. This standard shall be applied to building permit applications to assess the additional growth and its impact on adopted levels of service for all facilities and public infrastructures.

(Ord. No. 02-09, § 4, 2-19-2002)

Sec. 30-715. - Implementation strategy.

The following implementation strategy is in place to ensure that the goals, objectives, policies and program established in the capital improvements element of the comprehensive plan will be achieved:

(1) Development order review. When a development order is requested, the applicant will outline the required facilities, as related to level of service, for the proposed development, and how these facilities shall be provided concurrently.

(2) Building permit review. When a building permit is applied for, the applicant will outline the required facilities, as related to level of service, for the proposed development, and how these facilities shall be provided concurrently.

(3) Annual budget. The city's annual budget will identify projects which are targeted to maintain the level of service. Projects which are targeted for level of service maintenance but are unfunded or removed from the annual budget may cause the revocation of any development order or building permit which was issued upon the construction of that project.

(4) Comprehensive plan amendments. Reports to the state department of community affairs concerning amendments to the comprehensive plan due to emergencies, annexation, developments of regional impact, and selected small developments will report on changes, if any, to adopted goals, objectives, policies and programs in the capital improvements element.

(5) Annual level of service report. Each individual facility or service with an adopted level of service will be annually monitored to ensure that the level of service is maintained. The specific details for each monitoring scheduling and report can be found in the specific guidelines for concurrency.

(Ord. No. 02-09, § 5, 2-19-2002)

Sec. 30-716. - Monitoring.

(a) City-owned facilities and services. Monitoring for each adopted level of service shall take place annually.

(b) County and privately-owned facilities and services. A monitoring report detailing available capacity, available capacity for the next five years, and proposed capital facilities expansions, shall be prepared by each non-city entity providing facilities and services by January of each year.

(Ord. No. 02-09, § 6, 2-19-2002)

Sec. 30-717. - General procedural guidelines; reporting requirements.

(a) Report to planning board; planning board public hearing.

(1) Annual level of service report. Each year, the community development department shall compile a report which addresses the following in terms of the level of service for all services and facilities subject to the concurrency management section of the comprehensive plan:

a. Adopted level of service versus current level of service;

b. Current capital improvements program and potential capital improvements program options for maintaining level of service with a five-year timeframe;

c. Available or potential funding sources;

d. Current inventory of its facilities;

e. Current population and five-year projection, by year;

f. Comparison of the previous year's building permit activity to the past five years' inventory;

g. Potential developments, redevelopments or annexations which could have an impact on the current level of service; and

h. Relationship to the goals, objectives and policies of the comprehensive plan.

(2) Conduct of hearing. Following the annual level of service report, the planning board will hold a public hearing at which the board will discuss the current and adopted level of service for required public facilities. The annual level of service report shall be available to the board and the public at least two weeks before the public hearing. If the current level of service is below the adopted level of service policy standards, measures must be discussed by the board which either:

a. Fund the necessary improvements to reestablish the adopted level of service within a two-year transition period;

b. Adopt a lower level of service which would be consistent with current levels of service; or

c. Cease issuing development orders which negatively impact the level of service until the adopted level of service is reestablished.

(3) Notice of hearing. Preparation for the public hearing will follow the advertising and public notice procedures which are currently followed for the planning boards' regular meetings.

(4) Recommendation report. The planning board shall make recommendations to the city council regarding the maintenance of the level of service of the facilities and services. This report shall be based on the recommendations of the planning board.

(b) Action by city council.

(1) First reading. The community development department shall present its annual level of service report and the planning board's recommendations to the city council at a public meeting as soon as possible after the board makes its findings and recommendations. A resolution will be presented which adopts the recommendations of the board, adopts the recommendations of the boards with additional conditions, or modifies the recommendation of the board.

a. If the current level of service is below the adopted level of service, measures must be addressed by the city council which either:

1. Fund the necessary improvements to reestablish the adopted level of service within a two-year transition period;

2. Adopt a lower level of service which would be consistent with the then existing level of service; or

3. Cease issuing development orders which negatively impact the level of service until the adopted level of service is reestablished.

(2) Second reading and public hearing. The annual level of service report and the board's recommendation report shall be presented by the city manager. At this time, level of service deficiencies and mitigation options shall be discussed. Where necessary, potential changes to the capital improvements program shall also be addressed.

At the conclusion of the public hearing, the city council shall adopt a resolution that adopts the recommendations of the board, adopts the recommendations of the boards with additional conditions, or modifies the recommendation of the board. The city council shall direct the community development director to notify the state of its actions.

(c) Reporting to state department of community affairs.

(1) The community development director shall notify the state department of community affairs of the status of the level of service for the facilities and services as directed by the state department of community affairs or as otherwise required by state law.

(2) Copies of the level of service report shall be available to the public and city officials.

(Ord. No. 02-09, § 7, 2-19-2002; Ord. No. 10-06, § 2.2., 6-7-2010)

Sec. 30-718. - Adopted level of service standards for city owned and operated facilities and services.

The city is currently responsible for facilities and service levels related to transportation, stormwater drainage, community parks, potable water and sanitary sewer. The following adopted level of service (LOS) standards are contained in the comprehensive plan:

(1) Transportation.

a. Arterials LOS D (except SR 951 from the Jolley Bridge to CR 92 LOS C).

b. Collector roadways LOS D.

c. Local roads LOS D.

(2) Stormwater drainage. The LOS design standard for new stormwater management facilities will be the ten-year, one-hour storm event, with a 3.3 inches/hour intensity duration. For existing and future drainage system components the following design LOS standard hierarchy is provided:

a. LOS Standard A: Upstream (US) Ground Elevation Upstream Hydraulic Grade Line (US HGL) > 0.5 Ft.

b. LOS Standard B: US Ground Elevation US HGL > 0.2 ft.

c. LOS Standard C: US Ground Elevation US HGL > or = 0.0 ft.

d. LOS Standard D: US HGL < or = 5.2 ft. N.G.V.D.*

e. LOS Standard E: US HGL > 5.2 ft. N.G.V.D.*

For existing drainage system components a level not to exceed the parameters of LOS shall be adopted.

(*) May be acceptable LOS standard at a limited number of roadway locations due to extreme topographical conditions.

(3) Community parks.

a. LOS Standard. 1.2882 acres of active parkland/1,000 permanent residents.

b. Responsibility for monitoring. The public works director shall be responsible for monitoring and reporting activities relating to transportation and stormwater drainage facilities. The

community development director shall be responsible for monitoring and reporting activities relating to community parks.

(4) Potable water. The adopted LOS standard for potable water will be 200 gallons per capita per day.

(5) Sanitary sewer.

a. The adopted LOS standard for sanitary sewers is 100 gallons of wastewater treatment capacity per capita per day.

b. Responsibility for monitoring. The building official shall be responsible for monitoring and reporting activities relating to solid waste, potable water and sanitary sewers. The building official shall annually compile completed county issued notifications of mandatory garbage assessment forms received prior to the issuance of a certificate of occupancy. The private utility shall provide the building official with a report detailing available capacity for both potable water and sanitary sewer (wastewater) treatment.

(Ord. No. 02-09, § 8, 2-19-2002; Ord. No. 10-06, § 2.3., 6-7-2010)

Sec. 30-719. - Adopted level of service standards for county and privately owned and operated facilities and services.

The county is currently responsible for facilities and service levels related to solid waste and schools. The following adopted level of service (LOS) standards are contained in the comprehensive plan.

(1) Solid waste. The adopted LOS standard is the same as contained in the county growth management plan (GMP) which is described as follows:

a. 1.10 tons of solid waste per capita per year. (* Tons per capita is used to determine landfill disposal capacity, which is based on the average of the last five complete fiscal years actual lined cell tonnage activity).

b. A minimum of two years of constructed lined landfill capacity at the calculated waste generation rate.

c. A minimum of ten years of permittable landfill capacity at the calculated waste generation rate.

(2) Schools. See sections 30-733 to 30-735.

(Ord. No. 02-09, § 9, 2-19-2002; Ord. No. 10-06, § 2.4., 6-7-2010)

Sec. 30-720. - Corrections for LOS standard deficiencies.

(a) The purpose of the annual level of service report is to ensure that adequate public facilities are in place to serve existing development, and that adequate capacity will be available to serve future development. The following safeguards are intended to ensure that LOS standards are maintained and future development can be accommodated.

(1) Pursuant to adopted policies throughout the comprehensive plan, non-city entities responsible for the provision of facilities and services subject to LOS standards must notify the city in writing if they reach 80 percent of capacity in their adopted LOS standard within five year's of plan adoption, and any five-year period thereon. Such entity must inform the city as to how and when the entity will take action to increase capacity to ensure continued compliance with adopted LOS standards.

(2) For stormwater drainage and community parklands, the city shall monitor indices of possible or pending deficiencies, and will initiate corrective actions through the five-year capital improvement program to ensure continued compliance with adopted LOS standards.

(3) For transportation related LOS standards, the public works department shall monitor traffic counts and traffic impact assessments (TIA) and traffic impact statements (TIS) to ensure continued compliance with adopted LOS standards.

(b) Utilizing the abovementioned information, the public works director shall advise the city manager of any roadway segment that is forecast to be deficient in the adopted LOS standard within the ensuing five years. The public works director shall base his report to the city manager on the following information, as deemed necessary to ensure accurate LOS monitoring of transportation facilities:

(1) A listing of roadway segments, by category, with their individual current and adopted level of services;

(2) Current and potential level of service deficiencies;

(3) Current capital improvements program and potential capital improvements program options for maintaining level of service with a five-year timeframe;

(4) Available or potential funding sources;

(5) Current population and five-year projection, by year;

(6) Comparison of previous year's building permit activity to past five years' inventory.

(7) Potential developments, redevelopments or annexations which could have an impact on the current level of service; and

(8) Relationship to the goals, objective and policies on the comprehensive plan.

(c) Based on the advise of the public works director, the following actions may be initiated to ensure continued compliance:

(1) If the current level of service for transportation facilities is measured at the adopted level of service or better, no mitigating action is required.

(2) If the current level of service measured is nearing the next lower level of service, quarterly counts will be taken and analyzed for a peak hour/peak season count. If necessary, a detailed study of the capacity of the roadway segment, consistent with the 2000 (or the most current edition) DOT Highway Capacity Manual Data, will be undertaken concurrently with the collection of quarterly data.

(3) If the current level of service measured is at the next lower level of service, and had been at the adopted level of service the previous year, quarterly counts will be taken and analyzed for a peak hour/peak season count.

(4) If three consecutive quarterly counts, which may include the annual count, indicate that the roadway to be below the adopted level of service, then the roadway segment enters a transitional period at the beginning of the next fiscal year. During this period, the roadway may operate on one level below the adopted level of service for two years. Development orders may still be issued, provided that the improvements necessary to elevate the level of service have been planned, funded and adopted as part of the first two-year period of the capital improvements program. Construction for these improvements, including parallel facilities or improvements, must begin in or before the second year of the transition period.

(5) No development orders negatively impacting the affected segment shall be issued until improvements are made to the existing roadway, or a parallel facility is constructed or improved to capture traffic from the affected segment.

(6) If the measured level of service is at "F," the city shall cease issuing development orders that would serve to increase the volume of traffic on the affected segment.

(7) A comprehensive plan amendment is required to change the level of service for any road segment, or defer or delay construction, beyond the two-year transitional period, which is necessary to maintain or reestablish an adopted level of service.

(Ord. No. 02-09, § 10, 2-19-2002)

Sec. 30-721. - Requirements for issuance of a development order or building permit certificate of adequate public facilities.

Before a development order or building permit is issued, a certificate of adequate public facilities shall be prepared. The certificate shall indicate the following information:

(1) There is adequate capacity for the provision of potable water, sanitary sewer (if applicable), and solid waste collection for the project or new development. Compliance is deemed acceptable per letters from the private utility and the county.

(2) There is adequate community parkland to accommodate the impacts of the new project or proposed development. Compliance is deemed acceptable per approval of plans by the community development department staff.

(3) The roadway network can accommodate the new project or proposed development without a decrease in LOS standards. Compliance is deemed acceptable by the issuance of a right-of-way permit.

(4) The stormwater management system complies with applicable LOS standards. Compliance is deemed acceptable by the approval of the building.

(Ord. No. 02-09, § 11, 2-19-2002)

DIVISION 2. - TRANSPORTATION PROPORTIONATE FAIR-SHARE

Sec. 30-722. - Purpose and intent.

The purpose of this article is to establish a method whereby the impacts of development on transportation facilities can be mitigated by the cooperative efforts of the public and private sectors, to be known as the proportionate fair-share program, as required by and in a manner consistent with F.S. § 163.3180(16).

(Ord. No. 07-02, § 1, 1-22-2007)

Sec. 30-723. - Applicability.

The proportionate fair-share program shall apply to all developments in the City of Marco Island that have been notified of a lack of capacity to satisfy transportation concurrency on a transportation facility in the city concurrency management system, including transportation facilities maintained by FDOT or another jurisdiction that are relied upon for concurrency determinations. The proportionate fair-share program does not apply to developments of regional impact (DRIs) using proportionate fair-share under F.S. § 163.3180(12), or to developments exempted from concurrency as provided in F.S. § 163.3180, regarding exceptions and de minimis impacts.

(Ord. No. 07-02, § 1, 1-22-2007)

Sec. 30-724. - General requirements.

(a) An applicant may choose to satisfy the transportation concurrency requirements of the City of Marco Island by making a proportionate fair-share contribution, pursuant to the following requirements:

(1) The proposed development is consistent with the comprehensive plan and applicable land development regulations.

(2) The five-year schedule of capital improvements in the City of Marco Island CIE or the long-term schedule of capital improvements for an adopted long-term CMS includes a transportation improvement(s) that, upon completion, will satisfy the requirements of the City of Marco Island transportation CMS. The provisions of subsection (b) may apply if a project or projects needed to satisfy concurrency are not presently contained within the local government CIE or an adopted long-term schedule of capital improvements.

(b) The City of Marco Island may choose to allow an applicant to satisfy transportation concurrency through the proportionate fair-share program by contributing to an improvement that, upon completion, will satisfy the requirements of the City of Marco Island transportation CMS, but is not contained in the five-year schedule of capital improvements in the CIE or a long-term schedule of capital improvements for an adopted long-term CMS, where the following apply:

(1) The City of Marco Island adopts, by resolution or ordinance, a commitment to add the improvement to the five-year schedule of capital improvements in the CIE or long-term schedule of capital improvements for an adopted long-term CMS no later than the next regularly scheduled update. To qualify for consideration under this section, the proposed improvement must be reviewed by the city manager or designee, and determined to be financially feasible pursuant to F.S. § 163.3180(16)(b)1, consistent with the comprehensive plan, and in compliance with the provisions of this article. Financial feasibility for this section means that additional contributions, payments or funding sources are reasonably anticipated during a period not to exceed ten years to fully mitigate impacts on the transportation facilities.

(2) If the funds allocated for the five-year schedule of capital improvements in the City of Marco Island CIE are insufficient to fully fund construction of a transportation improvement required by the CMS, the City of Marco Island may still enter into a binding proportionate fair-share agreement with the applicant authorizing construction of that amount of development on which the proportionate fair-share is calculated if the proportionate fair-share amount in such agreement is sufficient to pay for one or more improvements which will, in the opinion of the governmental entity or entities maintaining the transportation facilities, significantly benefit the impacted transportation system.

The improvement or improvements funded by the proportionate fair-share component must be adopted into the five-year capital improvements schedule of the comprehensive plan or the long-term schedule of capital improvements for an adopted long-term concurrency management system at the next annual capital improvements element update.

(c) Any improvement project proposed to meet the developer's fair-share obligation must meet design standards of the City of Marco Island for locally maintained roadways and those of the FDOT for the state highway system.

(Ord. No. 07-02, § 1, 1-22-2007)

Sec 30-725. - Intergovernmental coordination.

Pursuant to policies in the Intergovernmental Coordination Element of the City of Marco Island comprehensive plan and applicable policies in the Southwest Florida Regional Planning Council Regional Plan, the City of Marco Island shall coordinate with affected jurisdictions, including Collier County and FDOT, regarding mitigation to impacted facilities not under the jurisdiction of the local government

receiving the application for proportionate fair-share mitigation. An interlocal agreement may be established with other affected jurisdictions for this purpose.

(Ord. No. 07-02, § 1, 1-22-2007)

Sec. 30-726. - Application process.

(a) Upon notification of a lack of capacity to satisfy transportation concurrency, the applicant shall also be notified in writing of the opportunity to satisfy transportation concurrency through the proportionate fair-share program pursuant to the requirements of section 30-724

(b) Prior to submitting an application for a proportionate fair-share agreement, a pre-application meeting shall be held to discuss eligibility, application submittal requirements, potential mitigation options, and related issues. If the impacted facility is on the SIS, then the FDOT and Collier County will be notified and invited to participate in the preapplication meeting.

(c) Eligible applicants shall submit an application to the City of Marco Island that includes any application fee as may be included in the city's schedule of fees and the following:

(1) Name, address and phone number of owner(s), developer and agent;

(2) Property location, including parcel identification numbers;

(3) Legal description and survey of property;

(4) Project description, including type, intensity, and amount of development;

(5) Phasing schedule, if applicable;

(6) Description of requested proportionate fair-share mitigation method(s); and

(7) Copy of concurrency application.

(d) The city manager or designee shall review the application and certify that the application is sufficient and complete. If an application is determined to be insufficient, incomplete, or inconsistent with the general requirements of the proportionate fair-share program as indicated in section 30-724, then the applicant will be notified in writing of the reasons for such deficiencies. If such deficiencies are not remedied by the applicant within 30 days of receipt of the written notification, then the application will be deemed abandoned. The Marco Island City Council may, in its discretion, grant an extension of time not to exceed 60 days to cure such deficiencies, provided that the applicant has shown good cause for the extension and has taken reasonable steps to effect a cure.

(e) Pursuant to F.S. § 163.3180(16)(e), proposed proportionate fair-share mitigation for development impacts to facilities on the SIS requires the concurrency of the FDOT. The applicant shall submit evidence of an agreement between the applicant and the FDOT for inclusion in the proportionate fair-share agreement.

(f) When an application is deemed sufficient, complete, and eligible, the applicant shall be advised in writing and a proposed proportionate fair-share obligation and binding agreement will be prepared by the City of Marco Island or the applicant with direction from the City of Marco Island and delivered to the appropriate parties for review, including a copy to the FDOT for any proposed proportionate fair-share mitigation on a SIS facility, no later than 60 days from the date at which the applicant received the notification of a sufficient application and no fewer than 30 days prior to the city council meeting when the agreement will be considered.

(g) The City of Marco Island shall notify the applicant regarding the date of the city council meeting when the agreement will be considered for final approval. No proportionate fair-share agreement will be effective until approved by the Marco Island City Council.

(Ord. No. 07-02, § 1, 1-22-2007)

Sec. 30-727. - Determining proportionate fair-share obligation.

(a) Proportionate fair-share mitigation for concurrency impacts may include, without limitation, separately or collectively, private funds, contributions of land, and construction and contribution of facilities.

(b) A development shall not be required to pay more than its proportionate fair-share. The fair market value of the proportionate fair-share mitigation for the impacted facilities shall not differ regardless of the method of mitigation.

(c) The methodology used to calculate an applicant's proportionate fair-share obligation shall be as provided for in F.S. § 163.3180(12), as follows:

"The cumulative number of trips from the proposed development expected to reach roadways during peak hours from the complete build out of a stage or phase being approved, divided by the change in the peak hour maximum service volume (MSV) of roadways resulting from construction of an improvement necessary to maintain the adopted LOS, multiplied by the construction cost, at the time of developer payment, of the improvement necessary to maintain the adopted LOS."

OR

Proportionate Fair-Share = σ[[(Development Trips;sub\sub;) / (SV Increase;sub\sub;)] × Cost;sub\sub;]

Where:

Development Trips;sub\sub; = Those trips from the stage or phase of development under review that are assigned to roadway segment "i" and have triggered a deficiency per the CMS;

SV Increase;sub\sub; = Service volume increase provided by the eligible improvement to roadway segment "i" per section 30-724;

Cost;sub\sub; = Adjusted cost of the improvement to segment "i". Cost shall include all improvements and associated costs, such as design, right-of-way acquisition, planning, engineering, inspection, and physical development costs directly associated with construction at the anticipated cost in the year it will be incurred.

(d) For the purposes of determining proportionate fair-share obligations, the City of Marco Island shall determine improvement costs based upon the actual cost of the improvement as obtained from the CIE, the MPO/TIP or the FDOT work program. Where such information is not available, improvement cost shall be determined using one of the following methods:

(1) An analysis by the City of Marco Island of costs by cross section type that incorporates data from recent projects and is updated annually and approved by the city council. In order to accommodate increases in construction material costs, project costs shall be adjusted by an inflation factor; or

(2) The most recent issue of FDOT transportation costs, as adjusted based upon the type of cross section (urban or rural); locally available data from recent projects on acquisition, drainage and utility costs; and significant changes in the cost of materials due to unforeseeable events. Cost estimates for state road improvements not included in the adopted FDOT work program shall be determined using this method in coordination with the FDOT district.

(e) If the City of Marco Island has accepted an improvement project proposed by the applicant, then the value of the improvement shall be determined using one of the methods provided in this section.

(f) If the City of Marco Island has accepted right-of-way dedication for the proportionate fair-share payment, credit for the dedication of the non site-related right-of-way shall be valued on the date of the dedication at 120 percent of the most recent assessed value by the Collier County Property

Appraiser or, at the option of the applicant, by fair market value established by an independent appraisal approved by the City of Marco Island and at no expense to the City of Marco Island. The applicant shall supply a drawing and legal description of the land and a certificate of title or title search of the land to the City of Marco Island at no expense to the City of Marco Island. If the estimated value of the right-of-way dedication proposed by the applicant is less than the City of Marco Island estimated total proportionate fair-share obligation for that development, then the applicant must also pay the difference. Prior to purchase or acquisition of any real estate or acceptance of donations of real estate intended to be used for the proportionate fair-share, public or private partners should contact the FDOT for essential information about compliance with federal law and regulations.

(Ord. No. 07-02, § 1, 1-22-2007)

Sec. 30-728. - Impact fee credit for proportionate fair-share mitigation.

(a) Proportionate fair-share contributions shall be applied as a credit against impact fees to the extent that all or a portion of the proportionate fair-share mitigation is used to address the same capital infrastructure improvements contemplated by Collier County's Impact Fee Ordinance.

(b) Impact fee credits for the proportionate fair-share contribution will be determined when the transportation impact fee obligation is calculated for the proposed development. Impact fees owed by the applicant will be reduced per the proportionate fair-share agreement as they become due per the City of Marco Island Impact Fee Ordinance. If the applicant's proportionate fair-share obligation is less than the development's anticipated road impact fee for the specific stage or phase of development under review, then the applicant or its successor must pay the remaining impact fee amount to the Collier County pursuant to the requirements of the Collier County Impact Fee Ordinance.

(c) Major projects not included within Collier County's Impact Fee Ordinance or created under subsection 30-724(b)(1) and (2) which can demonstrate a significant benefit to the impacted transportation system may be eligible at the Collier County's discretion for impact fee credits.

(d) The proportionate fair-share obligation is intended to mitigate the transportation impacts of a proposed development at a specific location. As a result, any road impact fee credit based upon proportionate fair-share contributions for a proposed development cannot be transferred to any other location unless provided for within Collier County's Impact Fee Ordinance.

(Ord. No. 07-02, § 1, 1-22-2007)

Sec. 30-729. - Proportionate fair-share agreements.

(a) Upon execution of a proportionate fair-share agreement (agreement) the applicant shall receive a city certificate of concurrency approval. Should the applicant fail to apply for a development permit within 12 months or timeframe provided in the local CMS of the execution of the agreement, then the agreement shall be considered null and void, and the applicant shall be required to reapply.

(b) Payment of the proportionate fair-share contribution is due in full prior to issuance of the final development order or recording of the final plat and shall be nonrefundable. If the payment is submitted more than 12 months from the date of execution of the agreement, then the proportionate fair-share cost shall be recalculated at the time of payment based on the best estimate of the construction cost of the required improvement at the time of payment, pursuant to section 30-727 and adjusted accordingly.

(c) All developer improvements authorized under this article must be completed prior to issuance of a development permit, or as otherwise established in a binding agreement that is accompanied by a security instrument that is sufficient to ensure the completion of all required improvements. It is the

intent of this section that any required improvements be completed before issuance of building permits or certificates of occupancy.

(d) Dedication of necessary right-of-way for facility improvements pursuant to a proportionate fair-share agreement must be completed prior to issuance of the final development order or recording of the final plat.

(e) Any requested change to a development project subsequent to a development order may be subject to additional proportionate fair-share contributions to the extent the change would generate additional traffic that would require mitigation.

(f) Applicants may submit a letter to withdraw from the proportionate fair-share agreement at any time prior to the execution of the agreement. The application fee and any associated advertising costs to the City of Marco Island will be nonrefundable.

(g) The City of Marco Island may enter into proportionate fair-share agreements for selected corridor improvements to facilitate collaboration among multiple applicants on improvements to a shared transportation facility.

(Ord. No. 07-02, § 1, 1-22-2007)

Sec. 30-730. - Appropriation of fair-share revenues.

(a) Proportionate fair-share revenues shall be placed in the appropriate project account for funding of scheduled improvements in the City of Marco Island CIE, or as otherwise established in the terms of the proportionate fair-share agreement. At the discretion of the local government, proportionate fair-share revenues may be used for operational improvements prior to construction of the capacity project from which the proportionate fair-share revenues were derived. Proportionate fair-share revenues may also be used as the 50 percent local match for funding under the FDOT TRIP.

(b) In the event a scheduled facility improvement is removed from the CIE, then the revenues collected for its construction may be applied toward the construction of another improvement within that same corridor or sector that would mitigate the impacts of development pursuant to the requirements of subsection 30-724(b)(2).

Where an impacted regional facility has been designated as a regionally significant transportation facility in an adopted regional transportation plan as provided in F.S. § 339.155, and then the City of Marco Island may coordinate with other impacted jurisdictions and agencies to apply proportionate fair-share contributions and public contributions to seek funding for improving the impacted regional facility under the FDOT TRIP. Such coordination shall be ratified by the City of Marco Island through an interlocal agreement that establishes a procedure for earmarking of the developer contributions for this purpose.

(c) Where an applicant constructs a transportation facility that exceeds the applicant's proportionate fair-share obligation calculated under section 30-728, the City of Marco Island shall reimburse the applicant for the excess contribution using one or more of the following methods:

(1) An impact fee credit account may be established for the applicant in the amount of the excess contribution, a portion or all of which may be assigned and reassigned under the terms and conditions acceptable to the City of Marco Island.

(2) An account may be established for the applicant for the purpose of reimbursing the applicant for the excess contribution with proportionate fair-share payments from future applicants on the facility.

(3) The City of Marco Island may compensate the applicant for the excess contribution through payment or some combination of means acceptable to the City of Marco Island and the applicant.

(Ord. No. 07-02, § 1, 1-22-2007)

Sec. 30-731. - Optional provisions.

(a) Cross jurisdictional impacts.

(1) In the interest of intergovernmental coordination and to reflect the shared responsibilities for managing development and concurrency, the City of Marco Island may enter an agreement with Collier County or the Florida Department of Transportation to address cross jurisdictional impacts of development on regional transportation facilities. The agreement shall provide for application of the methodology in this section to address the cross jurisdictional transportation impacts of development. This article may be amended as necessary in the future to reflect any such agreements.

(2) A development application submitted to the City of Marco Island subject to a transportation concurrency determination meeting all of the following criteria shall be subject to this section:

a. All or part of the proposed development is located within one mile of the area which is under the jurisdiction, for transportation concurrency, of Collier County or the Florida Department of Transportation; and

b. Using its own concurrency analysis procedures, the City of Marco Island concludes that the additional traffic from the proposed development would use five percent or more of the adopted peak hour level of service maximum service volume of a regional transportation facility within the concurrency jurisdiction of Collier County or Florida Department of Transportation ("impacted regional facility"); and

c. The impacted regional facility is projected to be operating below the level of service standard, adopted by Collier County or Florida Department of Transportation, when the traffic from the proposed development is included.

(3) Upon identification of an impacted regional facility pursuant to subsections (a)(2)a.—c., the City of Marco Island shall notify the applicant and Collier County or Florida Department of Transportation in writing of the opportunity to derive an additional proportionate fair-share contribution, based on the projected impacts of the proposed development on the impacted adjacent facility.

a. Collier County or Florida Department of Transportation shall have up to 90 days in which to notify the City of Marco Island of a proposed specific proportionate fair-share obligation, and the intended use of the funds when received. Collier County or Florida Department of Transportation must provide reasonable justification that both the amount of the payment and its intended use comply with the requirements of F.S. § 163.3180(16). Should Collier County or Florida Department of Transportation decline proportionate fair-share mitigation under this section, then the provisions of this section would not apply and the applicant would be subject only to the proportionate fair-share requirements of the City of Marco Island.

b. If the subject application is subsequently approved by the City of Marco Island, the approval shall include a condition that the applicant provides, prior to the issuance of any building permit covered by that application, evidence that the proportionate fair-share obligation to Collier County or Florida Department of Transportation has been satisfied. The City of Marco Island may require Collier County or Florida Department of Transportation to declare, in a resolution, ordinance, or equivalent document, its intent for the use of the concurrency funds to be paid by the applicant.

(4) Proportionate share program for TCEAs, TCMAs, and MMTDs. Within the any local TCMAs, and/or MMTDs, and/or TCEAs, the City of Marco Island hereby establishes a proportionate fair-share assessment, based on the expected costs and transportation benefits of all the

programmed improvements within that district, and based on the expected trip generation of the proposed development.

(Ord. No. 07-02, § 1, 1-22-2007)

Sec. 30-732. - Method for cost escalation.

This section contains a method to estimate growth in costs, through the computation of a three-year average of the actual cost growth rates. This will provide a growth rate that should be smoothed to avoid overcompensating for major fluctuations in costs that have occurred due to short term material shortages.

$Cost_n = Cost_0 \times (1 + Cost_growth_{3yr})^n$

Where:

$Cost_n$ = The cost of the improvements in year n;

$Cost_0$ = The cost of the improvement in the current year;

$Cost_growth_{3yr}$ = The growth rate of costs over the last three years;

n = The number of years until the improvement is constructed.

The three-year growth rate is determined by the following formula:

$Cost_growth_{3yr} = [Cost_growth_{-1} + Cost_growth_{-2} + Cost_growth_{-3}]/3$

Where:

$Cost_growth_{3yr}$ = The growth rate of costs over the last three years;

$Cost_growth_{-1}$ = The growth rate of costs in the previous year;

$Cost_growth_{-2}$ = The growth rate of costs two years prior;

$Cost_growth_{-3}$ = The growth rate of costs three years prior.

(Ord. No. 07-02, § 1, 1-22-2007)

Secs. 30-733—30-750. - Reserved.

ARTICLE XI. - COASTAL CONSTRUCTION SETBACK LINE VARIANCE

Sec. 30-751. - Purpose and intent.

The purpose of this article is to ensure that construction activities desired to occur beyond the established coastal construction setback line are thoroughly reviewed and permitted in accordance with the regulations contained herein. The intent of the article is to limit approval of variances related to coastal construction activities to those found consistent with the provisions of this article and the comprehensive plan.

(Ord. No. 02-03, § 1, 1-7-2002)

Sec. 30-752. - Title and citation.

This article shall be known and may be cited as the "Coastal Construction Setback Line Variance Regulations."

(Ord. No. 02-03, § 2, 1-7-2002)

Sec. 30-753. - Establishment of setback lines.

(a) The coastal construction setback line shall be that coastal construction setback line established by the department of natural resources of the state pursuant to F.S. § 161.053 and recorded in Coastal Setback Line Book 1, pages 1 through 12 inclusive, recorded October 31, 1974, as Clerk's Instrument No. 365665 of the public records of Collier County, Florida.

(b) Setback lines established under this article shall be reviewed upon petition of affected riparian upland owners. The city board of zoning appeals shall decide, after due public notice and hearing, whether a change in the setback line is justified, and shall notify the petitioner in writing. The present setback lines are presumed to be correct, and no change in setback lines shall be made except upon an affirmation showing by petitioner that any construction line established hereunder is a minimum of 150 feet landward of the mean high-water line or 75 feet landward of the vegetation line whichever is greater; and that the general public health, safety and welfare is preserved, upland properties protected, and beach and sand dune erosion controlled.

(Ord. No. 02-03, § 3, 1-7-2002)

Sec. 30-754. - Prohibited activities.

It shall be unlawful for any person, firm, corporation, or agency, public or private, to construct, reconstruct, or change existing structures, make any excavation, remove any beach material or otherwise alter existing ground elevations seaward of the coastal construction setback line, except as hereinafter provided.

(Ord. No. 02-03, § 4, 1-7-2002)

Sec. 30-755. - Variances.

Variances may be granted upon the finding of one of the following:

(1) If in the immediate contiguous or adjacent area a "number of existing structures" have established a reasonably continuous and uniform construction line closer to the line of mean high water than the line as herein established, and if said existing structures have not been unduly affected by erosion, a proposed structure may be permitted along such line if such proposed structure is also approved by the board of zoning appeals.

(2) Certain activities that may temporarily alter ground elevations such as artificial beach nourishment projects, excavation or maintenance dredging of inlet channels may be permitted seaward of the coastal construction setback line if said activity is in compliance with the city comprehensive plan, conservation and coastal management element, and also approved by the board of zoning appeals.

(3) In the event of conflict or uncertainty in the applicable location of the CCSL, the board of zoning appeals may grant a variance to resolve the conflict or uncertainty. However prior to rendering a decision the petitioner shall provide the board with a current, written opinion from the state department of environmental protection as to the advisability of granting the relief sought.

(Ord. No. 02-03, § 5, 1-7-2002)

Sec. 30-756. - Procedures for obtaining variances.

(a) A written petition requesting a variance from the established setback line shall be filed with the city manager or his designee along with a completed coastal setback line variance form and required fee. The petition include:

(1) A narrative description of petitioner's property with scaled maps and exhibits; and

(2) A description of the established setback line and the portion of the line which petitioner wishes to be varied; and

(3) The justification upon which the petitioner relies for the granting of the variances, to include compliance with the city's comprehensive plan, conservation and coastal management element.

(b) The board of zoning appeals shall within 60 days of the filing of the petition, hold a noticed public hearing. Due public notice shall mean at least 15 days' notice of the time and place of such hearing published one time in a newspaper of general circulation. The city manager reserves the right to forward any variance petition to the city planning board to conduct a public hearing and render a recommendation prior to submittal to the board of zoning appeals.

(c) The city manager or designee shall notify petitioner in writing of the decision rendered by the board of zoning appeals within 15 days of the public hearing.

(d) Any person aggrieved by a decision of the board of zoning appeals granting or denying a variance may apply to circuit court for judicial relief within 30 days after rendition of the decision by the board of zoning appeals. Review in the circuit court shall be by petition for a writ of certiorari and shall be governed by this Florida Appellate Rules.

(Ord. No. 02-03, § 6, 1-7-2002)

Sec. 30-757. - Exemptions.

Exemptions shall be reviewed administratively for compliance with applicable city codes, and shall not be heard by the board of zoning appeals. Exemptions to this article shall include:

(1) The removal of any plant defined as exotic vegetation by city code.

(2) Any modification, maintenance, or repair, to any existing structure within limits of the existing foundation or footprint, which does not require, involve, or include any additions to, or repair or modifications of, the existing foundation of that structure, except those modifications required by code, excluding additions or enclosure added, constructed, or installed below the first dwelling floor or lowest deck of the existing structure.

(3) Any structures(s) such as beach umbrellas and beach furniture that do not constitute fixed structure(s), do not require a building permit, weigh less than 100 pounds and upon review by the community development director or his designee is/are determined not to present an actual or potential threat to the beach and the dune system and adjacent properties. This exemption shall not be effective during sea turtle nesting season (May 1—October 31) unless the structures are moved daily form the beach.

(Ord. No. 02-03, § 7, 1-7-2002)

Sec. 30-758. - Permits.

The following activities seaward of the coastal construction setback line shall not require a hearing by the board of zoning appeals, but shall require a coastal construction setback line permit. Such permit shall be reviewed and approved administratively by the community development director or designee. The appropriate fee shall be submitted with permit application.

(1) Construction of dune walkover with a maximum width of six feet, when a state department of environmental protection (FDEP) permit has been obtained.

(2) The repair or reconstruction of an existing beach vendor hut or kiosk so long as the repair or reconstruction takes place within the confines of the existing structures' footprint.

(3) The construction of a new beach vendor hut or kiosk, not to exceed 120 square feet, and when a state department of environmental protection (FDEP) permit has been obtained.

(4) Creation, restoration, re-vegetation or repair of the dune or other natural area seaward of the CCSL on an individual parcel of land, when a state department of environmental protection (FDEP) permit has been obtained and the following criteria have been met:

a. Sand used must be compatible in color and grain size to existing sand.

b. Plants utilized shall be 100 percent native coastal species.

c. Restoration plans shall be designed by an individual with expertise in the area of environmental sciences, natural resource management or landscape architecture. Academic credentials shall be a bachelors or higher degree. Professional experience may be substituted for academic credentials on a year for year basis, provided at least two years professional experience are in the state.

(Ord. No. 02-03, § 8, 1-7-2002)

Secs. 30-759—30-790. - Reserved.

ARTICLE XII. - TEMPORARY USE PERMITS

Sec. 30-791. - Purpose and intent.

Based upon the nature of some uses, their impact on adjacent uses, their compatibility with surrounding properties, and the length of time a use is intended to function, there is an identified need to allow certain temporary uses within a development site, and to provide for other types of temporary uses such as special events, sales and promotions. It is the intent of this article is to classify temporary uses and to provide for their permitting.

(Ord. No. 02-15, § 1, 4-15-2002)

Sec. 30-792. - General.

(a) The community development director, or his designee, may grant a temporary use permit for requests that demonstrate compliance with the intent of this article. Approvals for such requests shall be based upon, but not limited to, the applicant's description of the temporary use, the intended duration of the use, hours of operation and the impacts of the proposed temporary use on adjacent properties. All requests for a temporary use permit shall submit a conceptual or site development plan (SDP) as provided for within this section.

(b) Temporary uses and events held at places of worship, community centers, or other buildings designed for such events are exempt from this article, subject to the following:

(1) The event will be held indoors on the subject property only.

(2) Parking for the event will be within the existing parking area and utilizing existing ingress and egress.

(3) One banner not exceeding 32 square feet is allowed per street frontage without a temporary use permit. Banner may be displayed for a maximum of seven days. Right-of-way signs are not permitted without an approved temporary use permit.

(Ord. No. 02-15, § 2, 4-15-2002)

Sec. 30-793. - Construction temporary use permit.

During the construction of any development for which a site development plan has been approved or a building permit issued, the developer may request a temporary use permit subject to the following:

(1) The temporary use permit shall be granted initially for a period not to exceed 24 months in length and may be renewed annually based upon demonstration of need. A request for renewal shall be submitted to the city manager or designee in writing 30 days prior to the expiration of the temporary use permit.

(2) Temporary construction and development permits shall be allowed for the following uses:

a. Temporary offices to be used for construction and administrative functions within the development.

b. Temporary offices to be used for sales functions, including sales offices, allowing for the sale, resale, or marketing of dwellings, structures, or property within the development in which it is located, or adjacent developments under the same control.

c. On-site mobile home used as a temporary office or storage facility for persons engaged in the development of the site.

d. On-site mobile radio and television equipment antennae.

e. On-site temporary use of structures and equipment for the building of roads, public utilities, and government projects.

f. Off-site temporary parking on property which is located contiguous to the subject development, or on property subject to a permit issued pursuant to subparagraph h., or would be contiguous except for a roadway that is not designated as a collector or arterial in the transportation element of the comprehensive plan, with written authorization of the property owner.

g. Other on-site uses similar to the foregoing uses and determined to meet the intent of this article.

h. Off-site staging no further than 150 feet from the building lot with written authorization from the property owner and proof of notification to adjoining property owners when, in the opinion of the building official, site constraints such as, but not limited to, an irregular shaped lot where building activity will take place indicates its appropriateness. In such case, only equipment, materials and vehicles used in the construction process of the permitted structure may be staged; any additional or unauthorized materials or lack of upkeep or reasonable maintenance shall result in revocation of the temporary use permit by the building official.

(3) In addition to the uses described above, a construction temporary use permit shall be obtained for the use of a vacant lot for the seawall manufacture, construction, repair and related boat dock construction activities on all vacant lots or parcels under the following conditions:

a. The contractor shall notify the city, as part of the building permit application process for seawall manufacture, construction, repair, and related boat dock construction activities, of its intentions to use a vacant lot for such purpose.

b. The contractor shall provide written permission from the property owner of the vacant lot. A copy shall be submitted to the city building services division and made a part of the temporary use permit application. The city shall require a signed document holding the city harmless from any claim by the property owner or the permit holder for any damage to the vacant lot or seawall. City staff shall provide notification to the property owner indicating any vacant lot utilized for seawall manufacture, construction, repair, and related boat dock construction activities may not be used again for an additional 365 days following expiration of the last temporary use permit utilized for the subject vacant lot. In addition, city staff will provide notification of the proposed temporary use of the vacant lot to all property owners within a 300-foot radius of the subject vacant lot, together with other conditions of the permit as may be required by the city.

c. The contractor shall post the subject property with a permit board and all applicable permits including a copy of the temporary use permit.

d. Manufacture of precast seawall panels and related boat dock construction activities on a vacant lot shall only be performed for a maximum of 100 consecutive days while an associated repair permit is active. More than one permitted seawall repair or marine construction contract may be staged at the vacant lot concurrently. Upon completion of the use and prior to the expiration of the 100-day period, the contractor shall restore the lot to pre-use condition. Any vacant lot so used shall not be used for seawall manufacture, construction, repair, and related boat dock construction activities for an additional 365 days following issuance of the last associated certificate of completion or CO, with the exception of an emergency repair or replacement to the seawall at the subject vacant lot.

e. Failure to comply with the provisions of this subsection shall constitute a violation of this code. If a violation is found, code compliance staff shall provide a notice of violation to the violator and allow for up to ten business days to cure. If the violation is not corrected by the time specified for correction, a stop work order shall be issued by the City of Marco Island Building Services Department. Contractors in violation shall receive a revocation of applicable permit(s) and shall not be granted any additional permits for the period of time a violation exists. If the violation has not been cured within time specified in the notice of violation, starting the next day a fine of $250.00 per day for a first violation and $500.00 per day for a repeat violation shall be assessed until the violation is corrected. If a violation is not corrected within ten business days from the date of issuance of the notice of violation, the city or city's designee may make all reasonable repairs which are required to bring the property into compliance and charge the violator with the reasonable cost of the repairs along with all fines imposed pursuant to this section. Future permits shall not be issued to the contractor until all fees, fines, and costs have been paid in full. Assessed fines may be appealed to the code enforcement board. Repeat violation shall mean a violation of this code by a person who has been previously found to have violated the same provision of this code within five years prior to the violation, notwithstanding the violations occur at different locations.

f. Special exceptions: The contractor may seek an administrative extension beyond the 100-day period provided the city manager or designee is presented sufficient information justifying the contractor's need. Justification may include inclement weather, unavailability of materials or other unexpected conditions beyond the control of the contractor. Staff may provide a maximum 45-day extension provided the request is justified. Exceptions shall not be used to extend use of the vacant lot beyond 145 consecutive days.

g. The contractor shall provide a silt fence along the side yard property lines.

h. Any type of demolition material shall be either removed from the lot or placed in a dumpster within five days. Piling, decking, and boatlift equipment that will be later reused

on that lot, shall be permitted to remain on site. Demolition, if by cutting, shall require a wet saw method, except for steel rebar. Demolition activity may not occur outside of the hours of 8:00 a.m. to 5:00 p.m., Monday through Saturday. Dumping or storage of any material not directly associated with current permitted job is expressly prohibited.

i. Manufactured seawalls shall not be stacked more than five feet in height.

j. The public works department shall determine whether temporary structures will be required to protect the swale area and proper stormwater conveyance.

k. Boat and barge repair shall not be allowed on vacant residentially zoned parcels. The use of any such boat, barge or vessel shall be subject to the specific requirements of Code section 54-111 and subsection 54-112(i).

l. Only equipment and vehicles directly associated with the permitted repairs will be allowed on the property, and only during an open permit.

(4) All construction temporary use requests shall require the submission of a conceptual plan which demonstrates that provisions will be made to adequately address the following:

a. Parking.

b. Landscaping.

c. Fire protection.

d. Handicapped access.

e. FEMA (floodplain management ordinance).

(Ord. No. 02-15, § 3, 4-15-2002; Ord. No. 10-15, § 2.1., 11-1-2010; Ord. No. 10-16, § 2.1., 11-1-2010; Ord. No. 12-14, § 2, 10-1-2012; Ord. No. 13-03, § 2, 3-4-2013)

Sec. 30-794. - Model homes and model sales center permit.

Model homes and model sales centers shall be of a temporary nature and may be allowed in any residential zoning district or residential component of a PUD by the issuance of a temporary use permit. Model homes are intended to facilitate the sale of the model design, or of products similar in design to the model. Model homes located within residential zoning districts, or within a residential component of a PUD shall be restricted to the promotion of a product or products permitted within the residential zoning district or PUD in which the model is located and further subject to the following:

(1) Use of a model home shall require a temporary use permit. Timeshares and fractional ownership facilities shall not be subject to this section. Model homes shall only be permitted for dwellings which have not been previously used as a residence.

(2) A model home or model sales center is not intended to allow the full scope of real estate activities and shall be restricted primarily to the sale and marketing of the model, or products similar to the model.

(3) When a model home is completed, a "temporary certificate of occupancy" will be issued to the owner of the model home to remain open for a period of 24 months. Extensions beyond this 24-month temporary certificate of occupancy may be granted for the structure in the event an extension is approved for the model's temporary use permit by the Marco Island Planning Board, pursuant to subsection (6).

(4) A temporary use permit for a model home or model sales center shall be issued initially for a period of 24 months. Extensions beyond the initial two-year permit may be granted in accordance with this article; no single extension shall be granted for a period greater than one year.

(5) All temporary use requests for model homes shall require the submission of a conceptual plan which demonstrates that provisions will be made to adequately address the following:

a. Off-street parking. Adjacent vacant single-family lot(s) may be used for model home parking. The applicant or the applicant's designee must submit the following to the community development director or his designee in order to receive approval for off-street parking:

i. Affidavit of authorization from property owner(s).

ii. Site plan for the parking area.

iii. Plan on how the parking surface will be returned to its natural grade and ground cover.

iv. $5,000.00 refundable performance bond to insure that the adjacent lot, which contains the temporary parking surface, is returned to its natural grade and ground cover.

v. A hedge row of at least 36 inches in height shall be planted and maintained around the vehicular parking area.

vi. The parking area shall be stabilized and a dustless surface utilized on top. Mulch or organic covers shall not be used as a dustless surface.

b. On-site parking. Four vehicular parking spaces shall be provided on the model site. A parking space may be provided in the garage. A handicap parking space is required and shall count as one of the four required spaces. A hedge row of at least 36 inches in height shall be planted and maintained around the on-site vehicular parking area.

c. Handicapped standards (including but not limited to access per F.B.C. 11-4.3 and handrail, grab bar requrements per F.B.C. 11-4.26.)

d. Signage standards.

e. Garage-office. For any garage being used as an office for a model home the applicant must submit the following:

i. Plan of garage-office facility, including false walls, temporary electrical and/or plumbing.

ii. Plan showing how garage will be returned to its original use.

iii. $10,000.00 refundable performance bond to ensure that the garage is converted back to the FEMA standards for single-family home usage.

(6) Extension of a temporary use permit issued for a model home or for a model sales center.

a. The extension of a temporary use permit for a model home or model sales center may be granted for a maximum of one year per extension, and a cumulative maximum of three years, and shall require public notice and a hearing by the planning board. Notice of the public hearing shall be prominently posted on the property for which the extension is sought. Notice of the public hearing shall be advertised in a newspaper of general circulation at least once 15 days prior to the hearing. Notice of the time and place of the public hearing shall be sent at least 15 days in advance of the hearing by mail to all owners of property within 300 feet of the subject property. The planning board's action shall be based upon consideration of the following factors:

1. The number of existing model homes or model sales centers within the immediate area of the extension request.

2. The classification of the right(s)-of-way upon which the model home or model sales center fronts.

3. The character or makeup of the area surrounding the model home or model sales center.

4. The potential effect of the model home or model sales center on adjacent and surrounding properties.

5. The existence of complaints relating to the use of the model home or model sales center which is the subject to the extension request.

6. A demonstration of good cause from the applicant why the extension request is needed.

b. When deemed necessary and based upon review of the above criteria, the planning board may impose such conditions upon the approval of the extension request it determines necessary to accomplish the purpose of this section and protect the safety and welfare of the public. Such conditions may include, but shall not be limited to, restrictions to the hour of operation, parking, signage, screening and buffering, and the length of the extension.

c. Extensions of temporary use permits for model homes or model sales centers in excess of three years shall require submittal and approval of a conditional use permit in accordance with the land development code.

(Ord. No. 02-15, § 4, 4-15-2002; Ord. No. 05-12, § 1, 10-17-2005; Ord. No. 10-09, §2.2., 8-16-2010)

Sec. 30-795. - Temporary sales.

(a) Temporary sales. The community development director, or his designee, may grant a temporary sales permit in the case of temporary sales, such as grand openings, going out of business sales, special promotional sales, or other similar sales (exclusive of garage sales, lawn sales and similar private home sales), subject to the following:

(1) Non-renewable permits of up to two weeks' duration, such that during any calendar year the sum total of all permits for such event does not exceed 28 days. Temporary permits may be allowed for up to an additional four weeks when approved by the city council for good cause shown. Such special approval shall be subject to stipulations or additional constraints deemed necessary and appropriate to the request. Such stipulations or constraints deemed necessary by the city council shall be noted as conditions to the issuance of said permits, and the permittee shall be required to sign a notarized agreement to said stipulations or constraints.

(2) Temporary sales permits may, in support of the use being permitted, include the placement of one sign, a maximum of 32 square feet, or two such signs for properties containing more than one street frontage, as well as merchandise, temporary structures and equipment. All temporary structures and equipment, merchandise, or placement and parking of vehicles in conjunction with the temporary sale shall conform to the minimum yard requirements of the district in which it is located. If the temporary use is not discontinued upon expiration of the permit, it shall be deemed a violation of the land development code and shall be subject to the penalties therein.

(3) Temporary sales permits may be issued to the owner(s) of a commercial establishment, or to the tenants(s) operating within a commercial establishment with the approval of the property owner or property manager, provided said tenants provides documentation of a current annual lease with the property owner. Uses permitted by an approved temporary sales permit shall be operated by the property owner or tenant(s), except as provided for in this article.

(4) Temporary sales permits shall be restricted to those zoning districts in which the sale of the items would normally be permitted. Further, the sales activity permitted by the temporary use permit shall be related to the principal commercial activities in operation on the subject property except as provided for in this article. The issuance of a temporary use permit shall not be issued for undeveloped properties.

(5) The community development director, or his designee, may issue temporary sales permits for satellite locations subject to the applicable restrictions set forth in this article, provided the

applicant currently operates a business from a permanent approved commercial location within the city. Additionally, the purpose of the temporary sale shall be the same as the principal purpose of the existing commercial business of the applicant.

(6) The community development director may, in determining a specific benefit to the public, grant a temporary sales event permit to facilitate the sale of an item or items not generally available within the community, subject to the applicable restrictions set forth in this section.

(7) Prior to the issuance of a temporary sales permit, a complete application, along with a conceptual site plan, shall be submitted to the community development director, or his designee. The conceptual plan, when reviewed in conjunction with the application, shall be of the appropriate scale and detail to adequately describe and define:

a. Vehicular and pedestrian traffic safety measures.

b. Additional parking requirements. A maximum of ten percent of the parking required by article V may be occupied or otherwise rendered unusable by the placement of temporary structures, equipment, signs and merchandise. The minimum required number of handicapped parking spaces pursuant to article V shall remain available for usage.

c. Limited activity hours.

d. Watchmen, fencing and lighting.

e. Fire protection measures.

f. Sanitary facilities.

g. If required, a financial guarantee assuring compliance with the conditions of the permit.

(8) In making such approval, the community development director, or his designee, may stipulate requirements or restrictions as deemed appropriate.

(9) Each event shall be subject to the applicable permit fee.

(b) Garage sales. Garage and yard sales are permitted in residential zoning districts as follows:

(1) A two-day permit may be issued for a garage sale, lawn sale, or similar private home sales every 12 months.

a. The permitted garage/yard sale shall be valid for no more than two days.

b. The permit shall authorize the use of a temporary sign not to exceed one and one-half square feet located on the permitted property. One additional off-site directional sign is allowed during a garage sale. Said off-site directional sign shall not exceed one and one-half square feet, and shall be placed at the intersection of the arterial or collector street providing access to the street on which the garage sale is being conducted.

c. Items offered for sale shall be generally recognized as household goods and wares. Pre-packaged, bulk items, vehicles, construction materials (i.e., doors, windows, fixtures) shall not be displayed or offered for sale.

(c) Estate and demolition sales. Estate and demolition sales are permitted in residential zoning districts as follows:

(1) A special event permit application must be submitted at least seven days in advance of the estate/demolition sale.

(2) The applicant is responsible for notifying the city police department of the sale.

(3) The permit shall be valid for no more than two days per 12-month period.

(4) The permit shall authorize the use of a temporary sign located on the permitted property. No signage shall be placed off-site or upon the public right-of-way.

(5) The applicant must utilize the services of an off duty law enforcement officer or dedicated attendant for crowd, traffic, and parking control.

(6) Failure to secure a demolition permit prior to a demolition sale will result in an immediate after-the-fact permit fee of $1,000.00.

(d) Temporary seasonal sales. A non-renewable five-week permit may be issued for seasonal and holiday related temporary sales subject to the following restrictions:

(1) Temporary use permits for seasonal sales may be issued for the following season/holiday related items:

a. Christmas trees.

b. Pumpkins.

(2) Temporary use permits for seasonal sales may be issued on improved or unimproved properties provided the applicant submits a conceptual site plan which demonstrates that provisions will be made to adequately address the following:

a. Vehicular and pedestrian traffic safety measures.

b. Adequate on-site, or additional off-site parking areas for unimproved properties. A maximum of ten percent of the parking required by article V may be occupied or otherwise rendered unusable by the placement of temporary structures, equipment, signs and merchandise. The minimum required number of handicapped parking spaces pursuant to article V shall remain available for usage.

c. Limited activity hours.

d. Watchmen, fencing, lighting.

e. Fire protection measures.

f. Sanitary facilities.

(3) The applicant shall provide a notarized letter from the property owner or the property manager granting permission to utilize the subject property for the temporary seasonal sale.

(4) Temporary use permits for seasonal/holiday sales may, in support of the use being permitted, include the placement of one sign, a maximum of 32 square feet, or two such signs for properties containing more than one street frontage, as well as merchandise, temporary structures and equipment. If the temporary use is not discontinued upon expiration of the permit, it shall be deemed a violation of the land development code and shall be subject to the penalties therein.

(Ord. No. 02-15, § 5, 4-15-2002; Ord. No. 05-12, § 2, 10-17-2005)

Sec. 30-796. - Community and special events.

(a) In the case of sports events, religious events, community events, or other similar events sponsored by nonprofit, charitable, civic, or membership organizations within the city, the community development director may grant non-renewable event permits of up to two weeks' duration, such that during any calendar year the sum total of all event permits do not exceed 28 days. For purposes of this section, temporary sales promotions as described in section 30-795 shall not qualify as a community or special event, and as such, event permits shall not be issued for temporary sales promotions described in section 30-795. Event permits may be allowed for an additional period of up to four weeks when approved by the city council. Such approval shall be subject to stipulations or additional constraints deemed necessary and appropriate to the request. Such stipulations or constraints deemed necessary by the city council shall be noted as conditions to the issuance of said

permit(s); and the permittee shall be required to sign a notarized agreement to said stipulations or constraints.

(1) Event permits may, in support of the use being permitted, include the placement of signs, merchandise, structures and equipment, and a mobile home as temporary office, but not for residency. Event permits may be allowed within improved or unimproved properties. If the event is not discontinued upon expiration of the permit, it shall be deemed a violation of the land development code and shall be subject to the penalties therein.

(2) Event permits shall be restricted to those zoning districts in which the use would normally be permitted, unless otherwise approved by the city council via a public petition request.

(3) The community development director shall accept without fee, event permit applications for sports events, religious events, community events, or other similar events, upon presentation of documentation that the sponsor of the event is a bona fide nonprofit organization and the event is intended to benefit the community at large, a specific group of individuals, or the nonprofit organization. Two such events per calendar year per organization are eligible for this exemption.

(4) In conjunction with an approved event permit, off-premises directional signs, not to exceed ten signs, may be placed within the right-of-way subject to the following criteria:

a. A map indicating the proposed off-site directional sign locations must be included with the event permit application.

b. Directional signs must be a minimum size of 18 inches × 24 inches and a maximum size of 24 inches × 32 inches.

c. It is recommended that the signs be blue with white lettering, however, directional signs may be any single color background with any single color copy.

d. The signs shall be professional in appearance and shall include the event permit number, which shall be placed on back of sign.

e. Signs may not be erected prior to five days before the scheduled event and must be removed within 24 hours of the completion of the event.

f. Signs shall not be located within medians, attached to traffic control signs or other authorized highway signs. Signs shall be located a minimum distance of 30 feet from street intersection and a minimum distance of six feet from the edge of pavement or three feet from the back of a curb. The bottom of all signs shall be a minimum of 12 inches above existing ground and the top of the sign shall not exceed a distance of five feet above the existing ground.

(5) Prior to the issuance of an event permit, a complete application, along with a site plan, shall be submitted to the community development director, or his designee. The site plan, when reviewed in conjunction with the application, shall be of the appropriate scale and detail to adequately address the following items:

a. Vehicular and pedestrian traffic safety measures.

b. External roads.

c. Property boundaries.

d. Existing on-site parking.

e. Parking (improved and unimproved to be used during the event).

f. Buildings and structures.

g. Tents.

h. Food and beverage vendors.

i. Hours of operation.

j. Watchmen, fencing, and lighting.

k. Fire protection measures.

l. Sanitary facilities.

m. Dedicated attendant for crowd, traffic, and parking control.

(6) In evaluating an event permit application, the community development director, or his designee, may stipulate requirements or restrictions as deemed appropriate.

(7) Each event shall be subject to the applicable permit fee.

(Ord. No. 02-15, § 6, 4-15-2002; Ord. No. 05-12, § 3, 10-17-2005)

Sec. 30-797. - Motion picture/television production permit.

(a) Permit required. A permit shall be required for the following: the use of set scenery, temporary structures, lighting equipment or other apparatus, special effects, or closure of public streets or accessways. This code shall not apply to bona fide newspaper, press association, newsreel or television news media personnel or for personal use.

(b) Application for permit. Any person, firm, corporation, association or governmental entity desiring to obtain a permit shall apply to the community development director; and said application shall include but not be limited to the following:

(1) Name, address (including local address) and telephone number of applicant.

(2) Proof of comprehensive general liability insurance coverage in the amount of at least $1,000,000.00 combined single limit, with the city listed as an additional named insured.

(3) Special effects to be utilized, especially incendiary or explosive devices, with proof or [of] not less than $5,000,000.00 comprehensive general liability insurance combined single limit with the city listed as an additional named insured. In addition, the application shall list the person in charge (pyrotechnician) of such special effects, together with his qualifications and licenser [licensing] by the applicable federal and/or state agencies, and authorization from the local fire district permitting the event.

(4) Locations, dates and hour of filming scene to be filmed.

(5) A description and sketch plan indicating the following:

a. Location of film events and parking facilities provided.

b. Plans for construction or utilization or [of] structures on subject site(s).

c. Number, type and location of sanitation facilities to be provided. Plans for disposal of refuse and debris, and restoration of the site(s) to its original condition.

d. Description of any lighting facilities that would be necessary and/or the need to disconnect any public lighting.

e. Approximate number and type of vehicles and/or equipment to be used and any special parking requirements. The number of personnel to be on location with the production.

f. Necessity for closures of public streets or sidewalks and for what duration and location.

g. Indicate any utilization of aircraft/fixed-wing, helicopter, or balloons at the subject site(s).

h. List of city personnel or equipment requested, and an agreement to pay for extraordinary services provided by the city.

i. Provisions for traffic control, fire safety and security precautions.

(6) If located on private property, not under the city's ownership or control, a written notarized agreement will be required from the property owner to allow the filming to occur on his property.

(c) Insurance requirements. The applicant shall, as a prerequisite to the issuance of a permit, maintain in force at all times during the permit period a comprehensive general liability policy with limits other than those described in [subsections] (b) and (c) above [sic] as recommended by the director of the risk management division upon a review of the particular circumstances involved and determined by the city council. Said applicant, as a prerequisite to the issuance of a permit, shall provide to the zoning director a certificate of insurance evidencing that said insurance is in existence and certifying that the city is a named insured and that the city be given 30 days' notice prior to the expiration or cancellation of the policy. Any additional insurance requirements for filming on private property will be at the discretion of the affected property owner.

(d) Indemnification. The applicant shall be required to indemnify and hold harmless the city, its officers, agents and employees from and against all claims, suits, actions, damages, liabilities, expenditures or causes of action arising out of or occurring during the activities of the applicant under a permit issued hereupon in the form and manner provided by the community development director.

(e) Issuance of permit. Upon presentation of the completed application, proof of insurance, payment of permit fee, surety bond or cash payment in lieu of the bond and review by the community development director, the permit may be issued. If the community development director determines that the use of public or private property could affect the public's use of the property, or have potential adverse impacts on surrounding properties, than he may require that the permit application be scheduled for a public hearing before the city council. The special circumstances could include, but are not limited to, closure of a public street or accessway; use of special effects, including incendiary or explosive devices; a large production crew or crowd control; and increased liability insurance required. The notice for the public hearing shall be advertised in a newspaper of general circulation at least one time 15 days prior to the hearing.

(f) Suspension of permit. Failure to comply with the terms and conditions of the temporary use permit once issued shall be grounds for immediate suspension of the permitted activity until such time as the noncompliance is remedied. The suspension shall be initially communicated orally, followed by a written suspension order; and continued failure to comply with the terms and conditions of the permit may result in revocation of the permit.

(g) Costs for extraordinary services. The city shall recover direct costs for extraordinary services rendered in connection with a production. Such costs shall include, but not limited to, charges for personnel and/or equipment committed in support of the production which are outside the normal scope of government services. Based on the information contained in the permit application, an estimate of these costs will be provided to the applicant prior to issuance of this permit. The city may require prepayment of all or a portion of these estimated costs prior to issuance of the permit. At the conclusion of the production, actual costs below or in excess of the estimates will be refunded by the city or paid by the applicant, respectively.

(h) Surety bond. A surety bond in the amount to be determined by the city will be required by a company authorized to issue bonds in the state or cash payment in lieu of the bond to provide for cleanup and/or restoration of the subject site(s).

(Ord. No. 02-15, § 7, 4-15-2002)

Sec. 30-798. - Penalties for noncompliance.

(a) In addition to any other available penalties, any person violating the provisions of this article, including the conditions contained in any permit issued hereunder, shall be subject to immediate citation and fine based on the schedule identified in section 14-78 of this Code.

(b) Unauthorized signs placed in the right-of-way or otherwise in violation of article VI, "signage" of the Code of Ordinances shall be subject to immediate removal by the city.

(Ord. No. 10-09, § 2.3., 8-16-2010)

Secs. 30-799—30-830. - Reserved.

ARTICLE XIII. - IMPACT FEES

DIVISION 1. - GENERALLY

Secs. 30-831—30-850. - Reserved.

DIVISION 2. - FIRE/RESCUE SERVICE

Sec. 30-851. - Purpose and intent.

The purpose and intent of this division is to provide for a fire/rescue services impact fee so that new development contributes its fair share to the cost and improvements to the fire/rescue services system.

(Ord. No. 02-17, § 1, 5-6-2002)

Sec. 30-852. - Definitions.

The following words, terms and phrases, when used in this division, shall have the meanings ascribed to them in this section, except where the context clearly indicates a different meaning:

Accessory building or structure shall mean a detached, subordinate structure, the use of which is clearly incidental to and related to the use of the principal building or use of the land and which is located on the same lot as the principal building.

Affordable housing shall mean a qualified dwelling unit or project, which is offered for sale or rent and meets specific eligibility criteria as contained in the housing element of the comprehensive plan.

Alternative fire/rescue services impact fee shall mean any alternative fee calculated by the applicant and approved by the city council.

Alternative fire/rescue services impact fee study shall mean a study prepared by the applicant and submitted to the city manager.

Applicant shall mean the person who applies for a building permit.

City council shall mean the City Council of Marco Island, Florida.

Building shall mean any structure, either temporary or permanent, built for the support, shelter, or enclosure of persons, chattels, or property of any kind or any other improvement, use, or structure, which creates or increases the potential demand in the fire/rescue services system.

Building permit shall mean an official document or certificate issued by the authority having jurisdiction, authorizing the development or siting of any building.

City shall mean the City of Marco Island, a political subdivision of the County of Collier, State of Florida.

City attorney shall mean the person appointed by the city council of the city to serve as its counsel, or the designee of such person.

City manager shall mean the chief administrative officer of the city, appointed by the city council of the city, or the designee of such person.

Encumbered shall mean monies committed by contract or purchase order in a manner that obligates the city to expend the encumbered amount upon delivery of goods, the rendering of services or the conveyance of real property provided by a vendor, supplier, contractor or owner.

Fire/rescue services shall mean the primary and support facilities, land, improvements, furniture, vehicles and equipment provided by the city that are primarily used for fire suppression and protection activities.

Fire/rescue services impact development shall mean land development designed or intended to permit a use of land which will contain more dwelling units, buildings or floor space than the existing use of land or otherwise change the use of land that increases the impact upon the fire/rescue services system.

Fire/rescue services impact fee or impact fee shall mean the fee imposed by the city, or, if applicable, the alternative fire/rescue services impact fee.

Impact fee study shall mean the study adopted, as amended and supplemented.

Local Government Comprehensive Planning and Land Development Regulation Act means the provisions of F.S. ch. 163, pt. II (F.S. § 163.3161 et seq.), as amended or supplemented, or its successor in function.

Owner shall mean the person holding legal title to the real property upon which fire/rescue services impact development is to occur.

Person shall mean an individual, a corporation, a partnership, an incorporated association, or any other similar entity.

Residential, multiple-family, pursuant to the definition contained in the land development code.

Residential, single-family, pursuant to the definition contained in the land development code.

Square footage shall mean the gross area measured in feet from the exterior faces of exterior walls or other exterior boundaries of the building.

(Ord. No. 02-17, § 2, 5-6-2002)

Sec. 30-853. - Rules of development.

For the purposes of administration and enforcement of this article, unless otherwise stated in this article, the following rules of development shall apply:

(1) In case of any difference of meaning or implication between the text of this article and any caption, illustration, summary table, or illustrative table, the text shall control.

(2) The word "shall" is always mandatory and not discretionary and the word "may" is permissive.

(3) Words used in the present tense shall include the future; words used in the singular shall include the plural and the plural the singular, unless the context clearly indicates the contrary; and use of the masculine gender shall include the feminine gender.

(4) The phrase "used for" includes "arranged for," "designed for," "maintained for," or "occupied for."

(5) Unless the context clearly indicated the contrary, where a regulation involves two or more items, conditions, provisions, or events connected by the conjunction "and," "or" or "either … or", the conjunction shall be interpreted as follows:

a. "And" indicated that all the connected terms, conditions, provisions or events shall apply.

b. "Or" indicates that the connected items, conditions, provisions or events may apply singly or in any combination.

c. "Either … or" indicates that the connected items, conditions, provisions or events shall apply singly but not in combination.

(6) The word "includes" shall not limit a term to the specific example but is intended to extend its meaning to all other instances or circumstances or like kind or character.

(Ord. No. 02-17, § 4, 5-6-2002)

Sec. 30-854. - Findings.

It is hereby ascertained, determined and declared:

(1) Future growth represented by fire/rescue services impact development should contribute its fair share to the cost of improvements and additions to the fire/rescue services system that are required to accommodate the use of such facilities by growth.

(2) Implementation of the impact fee to require future fire/rescue services impact development to contribute its fair share of the cost of improvements and additions to the fire/rescue services system is an integral and vital element of the regulatory plan of growth management.

(3) The standard of service for the fire/rescue services system, as determined in the impact fee study, is hereby approved and adopted by the city.

(4) Capital planning is an evolving process and the standard of service for the fire/rescue services system constitutes a projection of anticipated need for fire equipment and facilities, based upon present knowledge and judgment. Therefore, in recognition of changing growth patterns and the dynamic nature of population growth, it is the intent of the city council that the standard of service for the fire/rescue services system and the impact fee imposed be reviewed and adjusted periodically, to ensure that the fire/rescue services impact fees are imposed equitably and lawfully, based upon actual and anticipated growth at the time of their imposition.

(5) The imposition of the fire/rescue services impact fee is to provide a source of revenue to fund the development or improvement of the fire/rescue services system necessitated by growth.

(6) The city council specifically finds that fire/rescue services benefit all residents of the city and, therefore, the fire/rescue services impact fee shall be imposed in all areas of the city.

(7) This article shall not be construed to permit the collection of impact fees from fire/rescue services impact development in excess of the amount reasonably anticipated to offset the demand on the fire/rescue services system generated by the fire/rescue services impact development occurring subsequent to the effective date of the ordinance from which this division derives.

(8) Improvements and additions to the fire/rescue services system needed to eliminate any deficiency between the existing fire/rescue services system and the standard of service utilized in the adopted impact fee study, as amended and supplemented, shall be funded by revenues other than impact fees. Therefore, the revenue derived from the impact fee shall be utilized only for the acquisition of improvements and additions to the fire/rescue services system, which are necessitated by fire/rescue services impact development occurring subsequent to the effective date of the ordinance from which this division derives.

(Ord. No. 02-17, § 4, 5-6-2002)

Sec. 30-855. - Adoption of impact fee study.

The city council hereby adopts and incorporates by reference the fire/rescue services impact fee rate study, dated April 8, 2002 and any amendments, updates, or supplements thereto particularly the assumptions, conclusions and findings in such study and its amendments as to the determination of anticipated costs of additions to the fire/rescue services system required to accommodate growth.

(Ord. No. 02-17, § 5, 5-6-2002)

Sec. 30-856. - Imposition.

(a) All fire/rescue services impact development within the city shall pay the fire/rescue services impact fee as set forth and established in appendix A (section 30-869).

(b) The city council hereby adopts the fire/rescue services impact fee incorporated within appendix A (section 30-869), which shall be imposed upon all fire/rescue services system impact development occurring within the city.

(c) The fire/rescue services impact fee shall be paid in addition to all other fees, charges and assessments due for the issuance of a building permit and is intended to provide funds only for growth necessitated improvements and additions to the fire/rescue services system.

(Ord. No. 02-17, § 6, 5-6-2002; Ord. No. 13-01, § 2, 1-7-2013; Ord. No. 14-06, § 1, 8-4-2014)

Sec. 30-857. - Payment.

(a) Except as otherwise provided in this division, prior to the issuance of a building permit for a fire/rescue services impact development, an applicant shall pay the required fire/rescue services impact fee.

(b) The obligation for payment of the fire/rescue services impact fee shall run with the land.

(c) In the event that a building permit issued for a fire/rescue services impact development expires prior to completion of the fire/rescue services impact development for which it was issued, the applicant may within 90 days of the expiration of the building permit apply for a refund of the fire/rescue services impact fee. Failure to timely apply for a refund of the fire/rescue services impact fee shall waive any right to a refund.

    (1) Upon receipt of application for a refund, and after verifying that the building permit has expired and that the fire/rescue services impact development has not been completed, the city manager shall refund the fire/rescue services impact fee paid for such fire/rescue services impact development.

    (2) A building permit, which is subsequently issued for a fire/rescue services impact development on the same property, which was the subject of a refund, shall pay the required fire/rescue services impact fee.

(Ord. No. 02-17, § 7, 5-6-2002)

Sec. 30-858. - Use of monies.

(a) The city council hereby establishes separate accounting for the fire/rescue services impact fees, to be designated as the "fire/rescue services impact fee" which shall be maintained separate and apart from all other accounts of the city. All such impact fees shall be accounted for therein.

(b) The monies accounted for as "fire/rescue services impact fee" shall be used solely for the purpose of providing growth-necessitated development improvements, additions, and capital equipment for the fire/rescue services system in the city including, but not limited to:

(1) Design and development plan preparation;

(2) Permitting and fees;

(3) Development and design of fire/rescue services system buildings or improvements and additions thereto;

(4) Design and development of new drainage facilities required by the development of fire/rescue services system buildings, facilities or improvements and additions thereto;

(5) Relocating utilities required by the development of fire/rescue services system buildings, facilities or improvements and additions thereto;

(6) Landscaping;

(7) Development management and inspection;

(8) Surveying, soils, and material testing;

(9) Acquisition of capital equipment for fire suppression and protection;

(10) Acquisition of apparatus, equipment, or furniture necessary to expand the fire/rescue services system.

(11) Repayment of monies transferred or borrowed from any budgetary fund of the city subsequent to the adoption of this division, which were used to fund development, acquisition of improvements and additions to the fire/rescue services system;

(12) Payment of principal and interest, necessary reserves and costs of issuance under any bonds or other indebtedness issued by the city to fund growth impacted improvements and additions to the fire/rescue services system subsequent to the adoption of this division;

(13) Reimbursement of fire/rescue services impact fees due an applicant;

(14) Design and development of roadway improvements required by the fire/rescue services system; and

(15) To the extent provided by law, reimbursement or refund of costs incurred by the city in the preparation of any update to the impact fee study, any amendments or supplements, and any other administrative costs incurred by the city.

(c) The monies deposited into the fire/rescue services impact fee account shall be used solely to finance improvements and additions to the fire/rescue services system required by growth as projected in the impact fee study.

(d) Any funds on deposit, which are not immediately necessary for expenditure, shall be invested by the city. All income derived from such investments shall be accounted for as the "fire/rescue services impact fee" and used as provided herein.

(e) The fire/rescue services impact fee collected pursuant to this division shall be returned to the then current owner of the property for which such fee was paid if such fees have not been expended or encumbered prior to the end of the fiscal year immediately following the sixth anniversary of the date upon which such fee was paid. Refunds shall be made only in accordance with the following procedure:

(1) The then-current owner shall petition the city manager for the refund prior to the end of the fiscal year immediately following the sixth anniversary of the date of the payment of the fire/rescue services impact fee.

(2) The petition for refund shall contain:

a. A notarized sworn statement that the petitioner is the then-current owner of the property for which the impact fee was paid;

b. A copy of the dated receipt issued for payment of such fee or such other record as would indicate payment of such fee;

c. A certified copy of the latest recorded deed; and

d. A copy of the most recent ad valorem tax bill.

(3) Within three months from the date of receipt of a petition for refund, the city manager will advise the petitioner and the city council of the status of the impact fee requested for refund, and if such impact fee has not been expended or encumbered within its applicable time period, then it shall be returned to the petitioner. For the purposes of this section, fees collected shall be deemed to be spent or encumbered on the basis of the first fee in shall be the first fee out.

(f) Any owner entitled to a refund who fails to file a timely petition for a refund upon becoming eligible to do so shall be deemed to have waived any claim for a refund, and the city shall be entitled to retain and apply the impact fees for growth necessitated capital improvements and additions to the fire/rescue services system.

(Ord. No. 02-17, § 8, 5-6-2002)

Sec. 30-859. - Alternative fee calculation.

(a) In the event an applicant believes that the impact to fire/rescue services system resulting from his fire/rescue services impact development is less than the fee established, such applicant may, prior to issuance of a building permit for such fire/rescue services impact development, submit a calculation of an alternative fire/rescue services impact fee to the city manager pursuant to the provisions of this section. Upon receipt of the alternative fire/rescue services impact fee, the city manager shall schedule a hearing before the city council at a regularly scheduled meeting or a special meeting called for the purpose of reviewing the alternative fire/rescue services impact fee and shall provide the applicant written notice of the time and place of the hearing.

(b) The alternative fire/rescue services impact fee calculations shall be based on data, information or assumptions contained in this division and the impact fee study or an independent source, provided that the independent source is a local study supported by a data base adequate for the conclusions contained in such study performed pursuant to a generally accepted methodology and based upon generally accepted standard sources of information relating to facilities planning, cost analysis and demographics.

(c) If a previously approved fire/rescue services impact development project submitted, during its approval process, an alternative fire/rescue services impact study substantially consistent with the criteria required by this section, and if such study is determined by the city council to be current, the fire/rescue services system impact of such previously approved fire/rescue services impact development shall be presumed to be as described in the prior study. In such circumstances, an alternative fire/rescue services impact fee shall be established reflecting the impact described in the prior study. There shall be a rebuttable presumption that an alternative fire/rescue services impact study conducted more than two years earlier is invalid.

(d) If the city council determines that the data, information and assumptions utilized by the applicant to calculate the alternative fire/rescue services impact fee complies with the requirements of this section and that the alternative fire/rescue services impact fee was calculated by the use of a generally accepted methodology, the alternative fire/rescue services impact fee shall be paid in lieu of the fee set forth in section 30-869

(e) If the city council determines that the data, information and assumptions utilized by the applicant to calculate the alternative fire/rescue services impact fee does not comply with the requirements of this section or that the alternative fire/rescue services impact fee was not calculated by a generally accepted methodology, then the city shall provide to the applicant written notification of the rejection of the alternative fire/rescue services impact fee and the reason therefor.

(f) Any applicant or owner who has submitted a proposed alternative fire/rescue services impact fee pursuant to this section and desires the immediate issuance of a building permit shall pay prior to or at the time the request for hearing is filed the applicable fire/rescue services impact fee. Said payment shall be deemed paid under "protest" and shall not be construed as a waiver of any right of review. Any difference between the amount paid and the amount due, as determined by the city council, shall be refunded to the applicant or owner.

(Ord. No. 02-17, § 9, 5-6-2002)

Sec. 30-860. - Exemptions.

The following shall be exempted from payment of the impact fees:

(1) Alterations or replacement of a dwelling unit or building with a new dwelling unit or building of the same size or use and which will not increase the square footage associated therewith.

(Ord. No. 02-17, § 10, 5-6-2002)

Sec. 30-861. - Changes of size and use.

Impact fees shall be imposed and calculated for the alteration, expansion or replacement of a building or dwelling unit or the development of an accessory building if the alteration, expansion or replacement of the building or dwelling unit or the development of an accessory building results in a land use determined to: (1) increase the number of dwelling units; (2) increase the square footage; or (3) change the land use so as to constitute a different impact fee land use category. The impact fee imposed under the applicable impact fee rate shall be calculated as follows:

(1) If the impact fees are calculated on land use and not square footage, the impact fees imposed shall be the impact fees due under the applicable impact fee rate for the impact fee land use category resulting from the alteration, expansion or replacement less the impact fee that would be imposed under the applicable impact fee rate for the impact fee land use category prior to the alteration, expansion or replacement.

(2) In the event the square footage of a building is increased, the impact fee shall be calculated only for that increased square footage.

(3) The impact fee imposed for any accessory buildings shall be that applicable under the impact fee rate for the land use for the primary building.

(Ord. No. 02-17, § 11, 5-6-2002; Ord. No. 13-01, § 2, 1-7-2013; Ord. No. 14-06, § 1, 8-4-2014)

Sec. 30-862. - Vested rights.

(a) Any owner of land, which was the subject of a development order prior to the effective date of this division, may petition the city council for a vested rights determination, which would exempt the landowner from the provisions of this division. Such petition shall be evaluated by the city attorney and a decision made based on the following criteria:

(1) The existence of a valid, unexpired governmental act of the city authorizing the specific development for which a determination is sought;

(2) Expenditures or obligations made or incurred in reliance upon the authorizing governmental act that are reasonably equivalent to the fees required by this division;

(3) Other factors that demonstrate it is inequitable to deny the petitioner the opportunity to complete the previously approved development under the conditions of approval by requiring the

petitioners to comply with the requirements of this division. For the purposes of this paragraph, the following factors shall be considered in determining whether it is inequitable to deny the petitioner the opportunity to complete the previously approved development:

a. Whether the injury suffered by the petitioner outweights the public cost of allowing the development to go forward without payment of the impact fee required by this division; and

b. Whether the expenses or obligations for the development were made or incurred subsequent to the effective date of this division.

(b) The city attorney shall make a written determination as to whether the owner has established a vested right in the fire/rescue services impact development and, if so, whether the development would exempt the owner from the provisions of this division.

(c) Any owner aggrieved by a decision of the city attorney pursuant to this section may request a review hearing on such decision.

(Ord. No. 02-17, § 12, 5-6-2002)

Sec. 30-863. - Affordable housing.

Consistent with the goals, objectives and policies contained in the housing element of the city's adopted comprehensive plan, all qualified affordable housing projects on Marco Island will be considered for waiver or deferment of local impact fees, including fire service impact fees. Pursuant to the terms and conditions contained in the executed housing interlocal agreement, county housing and urban improvement staff will oversee the application process, and review and make recommendations concerning requests for county impact fee waiver or deferment for qualified housing projects. Any affordable housing project recommended for county impact fee waiver or deferment by county housing staff will be considered for fire/rescue services impact fee waiver or deferment.

(Ord. No. 02-17, § 13, 5-6-2002)

Sec. 30-864. - Alternative collection method.

In the event the fire/rescue services impact fee are not paid prior to the issuance of a building permit for the affected fire/rescue services impact development, the city shall proceed to collect the fire/rescue services impact fee as follows:

(1) The city shall serve, by certified mail, return receipt requested, a "notice of impact fee statement" upon the applicant at the address set forth in the application for building permit, and the owner at the address appearing on the most recent records maintained by the property appraiser of the city. The city shall also attach a copy of the "notice of impact fee statement" to the building permit posted at the affected fire/rescue services impact development site if the building is under development. Service shall be deemed effective on the date the return receipt indicates the notice was received by either the applicant or the owner or the date said notice was attached to the building permit, whichever occurs first. The "notice of impact fee statement" shall contain the legal description of the property and shall advise the applicant and the owner as follows:

a. The amount due and the general purpose for which the fire/rescue services impact fee was imposed;

b. That a hearing may be requested within 30 calendar days from the effective date of service of the notice of impact fee statement, by making application to the office of the city manager.

c. That the fire/rescue services impact fee shall be delinquent if not paid and received by the city within 30 calendar days of the effective date of service of the notice of impact fee

statement, excluding the date of receipt or if a hearing is not requested, and, upon becoming delinquent, shall be subject to the imposition of a delinquent fee and interest on the unpaid amount until paid; and

d. That in the event the fire/rescue services impact fee become delinquent, a lien against the property for which the building permit was secured shall be recorded in the official records book of the city.

(2) The fire/rescue services impact fee shall be delinquent if, within 30 calendar days from the effective date of service of the notice of impact fee statement, neither the impact fees have been paid and received by the city, nor a hearing is requested. In the event a hearing is requested, the impact fees shall become delinquent if not paid within 30 days from the date the city council determines the amount of impact fees due upon the conclusion of such hearing. Upon becoming delinquent, a delinquency fee equal to ten percent of the total impact fee imposed shall be assessed. Such total impact fee, plus delinquency fee, shall bear interest at the statutory rate for final judgments calculated on a calendar day basis, until paid.

(3) Should the fire/rescue services impact fee become delinquent, the city shall serve, by certified mail return receipt requested, a "notice of lien" upon the delinquent applicant, if the building is under development at the address indicated in the application for the building permit, and upon the delinquent owner at the address appearing on the most recent records maintained by the property appraiser of the county. The notice of lien shall notify the delinquent applicant and delinquent owner that due to their failure to pay the fire/rescue services impact fee, the city shall file a claim of lien with the clerk of the circuit court.

(4) Upon the mailing of the notice of lien, the city attorney shall file a claim of lien with the clerk of the circuit court for recording in the official records of the county. The claim of lien shall contain the legal description of the property, the amount of the delinquent impact fee and the date of its imposition. Once recorded, the claim of lien shall constitute a lien against the property described therein. The city attorney shall proceed expeditiously to collect, foreclose, or otherwise enforce said lien.

(5) After the expiration of one year from the date of recording of the claim of lien, as provided herein, a suit may be filed to foreclose said lien. Such foreclosure proceedings shall be instituted, conducted and enforced in conformity with the procedures for the foreclosure of municipal special assessment liens, as set forth in F.S. ch. 173, which provisions are hereby incorporated herein in their entirety to the same extent as if such provisions were set forth herein verbatim.

(6) The liens for delinquent impact fees imposed hereunder shall remain liens, coequal with the lien of all state, county, district and municipal taxes, superior in dignity to all other filed liens and claims, until paid as provided herein.

(7) The collection and enforcement procedures set forth in the section shall be cumulative with, supplemental to and in addition to, all other applicable procedures provided in any other ordinances or administrative regulations of the city or any applicable law or administrative regulation of the state. Failure of the city to follow the procedure set forth in this section shall not constitute a waiver of its rights to proceed under any other ordinances or administrative regulations of the city or any applicable law or administrative regulation of the state.

(Ord. No. 02-17, § 14, 5-6-2002)

Sec. 30-865. - Developer contribution credit.

(a) The city shall grant a credit against the fire/rescue services impact fee imposed by this division, for the development of any building facilities or improvements and additions thereto made to the fire/rescue services system required pursuant to a development order or made voluntarily in connection with fire/rescue services impact development. Such development shall be subject to the

approval of the city manager and shall be an integral part of and a necessary accommodation to an existing or contemplated fire/rescue services system.

(b) The amount of developer contribution credit to be applied shall be determined at the time that the fire/rescue services impact fee is paid according to the following standards of valuation: the cost of anticipated development to the fire/rescue services system shall be based upon professional opinions of probable cost certified by a professional architect or engineer.

(c) Prior to issuance of a building permit, the applicant shall submit to the city manager a proposed plan and estimate of costs for contributions to the fire/rescue services system. The proposed plan and estimate shall include:

(1) A designation of the fire/rescue services impact development for which the proposed plan is being submitted;

(2) A list of the contemplated fire/rescue services system improvements contained within the plan;

(3) An estimate of proposed development costs certified by a professional architect or engineer; and

(4) A proposed time schedule for completion of the proposed plan.

(d) Upon receipt of the proposed plan, the city manager shall schedule a hearing before the city council, at a regularly scheduled meeting or a special meeting called for the purpose of reviewing the proposed plan, and shall provide the applicant or owner written notice of the time and place of the hearing.

(e) The city council shall determine:

(1) If such proposed plan of development is in conformity with contemplated fire/rescue services additions to the fire/rescue services system;

(2) If the proposed plan is consistent with the public interest; and

(3) If the proposed development time schedule for the completion of the plan is consistent with the city's capital improvement program for the fire/rescue services system.

The decision of the city council as to whether to accept the proposed plan of development shall be in writing and issued within ten working days of the review. A copy shall be provided to the applicant. Upon approval of a proposed plan of development, the city council shall determine the amount of development credit based upon the above standards of valuation and shall approve the timetable for completion of development.

(f) All development cost estimates shall be based upon, and all development plans and specifications shall be in conformity with the fire/rescue services development standards of the city. All plans and specifications shall be approved by the city manager prior to commencement of development.

(g) Any developer contribution credit granted from the fire/rescue services impact fee shall only be for those donations or contributions made to a fire/rescue services system.

(h) Any applicant who submits a proposed plan pursuant to this section and desires the immediate issuance of a building permit shall pay prior to or at the time the request for hearing is filed the applicable fire/rescue services impact fee. Said payment shall be deemed paid under "protest" and shall not be construed as a waiver of any review rights. Any difference between the amount paid and the amount due, as determined by the city council, shall be refunded to the applicant or owner.

(i) In the event the amount of developer contribution determined to be applicable by the city council pursuant to an approved plan of development exceeds the total amount of impact fees due by the applicant based upon the contemplated improvements to the fire/rescue services system proposed by the applicant, the city shall execute with the applicant an agreement for future reimbursement of the excess of such contribution credit from future receipts by the city of fire/rescue services impact fees. Such agreement of reimbursement shall not be for a period in excess of five years from the

date of completion of the approved plan of development and shall provide for a forfeiture of any remaining reimbursement balance at the end of such five-year period.

(Ord. No. 02-17, § 15, 5-6-2002)

Sec. 30-866. - Review hearings.

(a) An applicant or owner who is required to pay a fire/rescue services impact fee, shall have the right to request a review hearing.

(b) Such hearing shall be limited to the review of the following:

(1) The application of the fire/rescue services impact development.

(2) A vested rights determination under this division.

(3) The denial of an affordable housing waiver or authorization for deferral pursuant to this division.

(c) Such hearing shall be requested by the applicant or owner within 30 days of the date of first receipt of the following:

(1) Notice of impact fee statement;

(2) A vested rights determination;

(3) The denial of an affordable housing waiver or authorization for deferral.

Failure to request a hearing within the time provided shall be deemed a waiver of such right.

(d) The request for hearing shall be filed with the office of city manager and shall contain the following:

(1) The name and address of the applicant or owner;

(2) The legal description of the property in question;

(3) If issued, the date the building permit was issued;

(4) A brief description of the nature of the development being undertaken pursuant to the building permit;

(5) If paid, the date the fire/rescue services impact fee was paid; and

(6) A statement of the reasons why the applicant or owner is requesting the hearing.

(e) Upon receipt of such request, the city manager shall schedule a hearing before the city council at the regularly scheduled meeting or a special meeting called for the purpose of conducting the hearing and shall provide the applicant or owner written notice of the time and place of the hearing. Such hearing shall be held within 45 days of the date the request for hearing was filed.

(f) Such hearing shall be before the city council and shall be conducted in a manner designed to obtain all information and evidence relevant to the requested hearing. Formal rules of civil procedure and evidence shall not be applicable; however, the hearing shall be conducted in a fair and impartial manner with each party having an opportunity to be heard and to present information and evidence.

(g) Any applicant or owner who requests a hearing pursuant to this section and desires the immediate issuance of a building permit, or if a building permit has been issued without the payment of the fire/rescue services impact fee, shall pay prior to or at the time the request for hearing is filed the applicable impact fees. Said payment shall be deemed paid under "protest" and shall not be construed as a waiver of any review rights.

(h) An applicant or owner may request a hearing under this section without paying the applicable impact fee but no building permit shall be issued until such impact fees are paid in the amount initially calculated or the amount approved upon completion of the review provided in this section.

(Ord. No. 02-17, § 16, 5-6-2002)

Sec. 30-867. - Review requirement.

This division and the impact fee study shall be reviewed at least every five years. The initial and each review shall consider new estimates of population and other socioeconomic data; changes in development, land acquisition and related costs and adjustments to the assumptions, conclusions or findings set forth in the study. The purpose of this review is to evaluate and revise, if necessary, the fire/rescue services impact fee to assure that they do not exceed the reasonably anticipated costs associated with the improvements and additions necessary to offset the demand generated by the fire/rescue services impact development on the fire/rescue services system. In the event the review of the article required by this section alters or changes the assumptions, conclusions, and findings of the study adopted by reference, revises or changes the fire/rescue services system or alters or changes the amount of impact fees, the study adopted by reference shall be amended and updated to reflect the assumptions, conclusions, and findings of such reviews and shall be amended to adopt by reference such updated studies.

(Ord. No. 02-17, § 17, 5-6-2002)

Sec. 30-868. - Declaration of exclusion from Administrative Procedures Act.

Nothing contained in this division shall be construed or interpreted to include the city in the definition of agency contained in F.S. § 120.52, or to otherwise subject the city to the application of the Administrative Procedure Act, F.S. ch. 120. This declaration of intent and exclusion shall apply to all proceedings taken as a result of or pursuant to this division including specifically, but not limited to, consideration of a petition for vested rights determination, a determination of entitlement to an impact fee waiver or authorization for deferral, and a review hearing.

(Ord. No. 02-17, § 18, 5-6-2002)

Sec. 30-869. - Appendix A, impact fee rates.

Land Use	Total Fire/Rescue Cost Per Unit of Development
Residential:	
Single-family	304.53 per dwelling unit
Multifamily	310.89 per dwelling unit
Nonresidential:	
Lodging:	

Hotel/Motel	302.86 per room
Medical:	
Hospital/Clinics	0.86 per square foot
Commercial:	
Office	0.26 per square foot
Retail	0.37 per square foot
Restaurant/Lounge	1.54 per square foot
Industrial/Manufacturing	0.07 per square foot
Leisure/Outdoors	0.43 per square foot
Institutions:	
Church	0.28 per square foot
School/College	1.73 per square foot
Government/Public Bldg.	0.45 per square foot

(Ord. No. 02-17, § 19, 5-6-2002)

Secs. 30-870—30-890. - Reserved.

DIVISION 3. - POLICE SERVICES

Sec. 30-891. - Purpose and intent.

The purpose and intent of this division is to provide for a police services impact fee so that new development contributes its fair share to the cost and improvements to the police services system.

(Ord. No. 02-18, § 1, 5-6-2002)

Sec. 30-892. - Definitions.

The following words, terms and phrases, when used in this division, shall have the meanings ascribed to them in this section, except where the context clearly indicates a different meaning:

Accessory building or structure shall mean a detached, subordinate structure, the use of which is clearly incidental to and related to the use of the principal building or use of the land and which is located on the same lot as the principal building.

Affordable housing shall mean a qualified dwelling unit or project, which is offered for sale or rent and meets specific eligibility criteria as contained in the housing element of the comprehensive plan.

Alternative police services impact fee shall mean any alternative fee calculated by the applicant and approved by the city council.

Alternative police services impact fee study shall mean a study prepared by the applicant and submitted to the city manager.

Applicant shall mean the person who applies for a building permit.

City council shall mean the City Council of Marco Island, Florida.

Building shall mean any structure, either temporary or permanent, built for the support, shelter, or enclosure of persons, chattels, or property of any kind or any other improvement, use, or structure, which creates or increases the potential demand in the police services system.

Building permit shall mean an official document or certificate issued by the authority having jurisdiction, authorizing the development or siting of any building.

City shall mean the City of Marco Island, a political subdivision of the County of Collier, State of Florida.

City attorney shall mean the person appointed by the city council of the city to serve as its counsel, or the designee of such person.

City manager shall mean the chief administrative officer of the city, appointed by the city council of the city, or the designee of such person.

Encumbered shall mean monies committed by contract or purchase order in a manner that obligates the city to expend the encumbered amount upon delivery of goods, the rendering of services or the conveyance of real property provided by a vendor, supplier, contractor or owner.

Impact fee study shall mean the study adopted, as amended and supplemented.

Local Government Comprehensive Planning and Land Development Regulation Act means the provisions of F.S. ch. 163, pt. II (F.S. § 163.3161 et seq.), as amended or supplemented, or its successor in function.

Police services shall mean the primary and support facilities, land, improvements, furniture, vehicles and equipment provided by the city that are primarily used for law enforcement and police protection activities.

Police services impact development shall mean land development designed or intended to permit a use of land which will contain more dwelling units, buildings or floor space than the existing use of land or otherwise change the use of land that increases the impact upon the police services system.

Police services impact fee or impact fee shall mean the fee imposed by the city, or, if applicable, the alternative police services impact fee.

Owner shall mean the person holding legal title to the real property upon which police services impact development is to occur.

Person shall mean an individual, a corporation, a partnership, an incorporated association, or any other similar entity.

Residential, multiple-family, pursuant to the definition contained in the land development code.

Residential, single-family, pursuant to the definition contained in the land development code.

Square footage shall mean the gross area measured in feet from the exterior faces of exterior walls or other exterior boundaries of the building.

(Ord. No. 02-18, § 2, 5-6-2002)

Sec. 30-893. - Rules of development.

For the purposes of administration and enforcement of this division, unless otherwise stated in this division, the following rules of development shall apply:

(1) In case of any difference of meaning or implication between the text of this division and any caption, illustration, summary table, or illustrative table, the text shall control.

(2) The word "shall" is always mandatory and not discretionary and the word "may" is permissive.

(3) Words used in the present tense shall include the future; words used in the singular shall include the plural and the plural the singular, unless the context clearly indicates the contrary; and use of the masculine gender shall include the feminine gender.

(4) The phrase "used for" includes "arranged for," "designed for," "maintained for," or "occupied for."

(5) Unless the context clearly indicated the contrary, where a regulation involves two or more items, conditions, provisions, or events connected by the conjunction "and," "or" or "either … or", the conjunction shall be interpreted as follows:

a. "And" indicated that all the connected terms, conditions, provisions or events shall apply.

b. "Or" indicates that the connected items, conditions, provisions or events may apply singly or in any combination.

c. "Either … or" indicates that the connected items, conditions, provisions or events shall apply singly but not in combination.

(6) The word "includes" shall not limit a term to the specific example but is intended to extend its meaning to all other instances or circumstances or like kind or character.

(Ord. No. 02-18, § 3, 5-6-2002)

Sec. 30-894. - Findings.

It is hereby ascertained, determined and declared:

(1) Future growth represented by police services impact development should contribute its fair share to the cost of improvements and additions to the police services system that are required to accommodate the use of such facilities by growth.

(2) Implementation of the impact fee to require future police services impact development to contribute its fair share of the cost of improvements and additions to the police services system is an integral and vital element of the regulatory plan of growth management.

(3) The standard of service for the police services system, as determined in the impact fee study, is hereby approved and adopted by the city.

(4) Capital planning is an evolving process and the standard of service for the police services system constitutes a projection of anticipated need for police equipment and facilities, based upon present knowledge and judgment. Therefore, in recognition of changing growth patterns

and the dynamic nature of population growth, it is the intent of the city council that the standard of service for the police services system and the impact fee imposed be reviewed and adjusted periodically, to ensure that the police services impact fees are imposed equitably and lawfully, based upon actual and anticipated growth at the time of their imposition.

(5) The imposition of the police services impact fee is to provide a source of revenue to fund the development or improvement of the police services system necessitated by growth.

(6) The city council specifically finds that police services benefit all residents of the city and, therefore, the police services impact fee shall be imposed in all areas of the city.

(7) This division shall not be construed to permit the collection of impact fees from police services impact development in excess of the amount reasonably anticipated to offset the demand on the police services system generated by the police services impact development occurring subsequent to the effective date of the ordinance from which this division derives.

(8) Improvements and additions to the police services system needed to eliminate any deficiency between the existing police services system and the standard of service utilized in the adopted impact fee study, as amended and supplemented, shall be funded by revenues other than impact fees. Therefore, the revenue derived from the impact fee shall be utilized only for the acquisition of improvements and additions to the police services system, which are necessitated by police services impact development occurring subsequent to the effective date of the ordinance from which this division derives.

(Ord. No. 02-18, § 4, 5-6-2002)

Sec. 30-895. - Adoption of impact fee study.

The city council hereby adopts and incorporates by reference the police services impact fee rate study, dated April 8, 2002 and any amendments, updates, or supplements thereto particularly the assumptions, conclusions and findings in such study and its amendments as to the determination of anticipated costs of additions to the police services system required to accommodate growth.

(Ord. No. 02-18, § 5, 5-6-2002)

Sec. 30-896. - Imposition.

(a) All police services impact development within the city shall pay the police services impact fee as set forth and established in appendix A (section 30-909).

(b) The city council hereby adopts the police services impact fee incorporated within appendix A (section 30-909), which shall be imposed upon all police services system impact development occurring within the city.

(c) The police services impact fee shall be paid in addition to all other fees, charges and assessments due for the issuance of a building permit and is intended to provide funds only for growth necessitated improvements and additions to the police services system.

(Ord. No. 02-18, § 6, 5-6-2002; Ord. No. 13-01, § 2, 1-7-2013; Ord. No. 14-06, § 1, 8-4-2014)

Sec. 30-897. - Payment.

(a) Except as otherwise provided in this division, prior to the issuance of a building permit for a police services impact development, an applicant shall pay the required police services impact fee.

(b) The obligation for payment of the police services impact fee shall run with the land.

(c) In the event that a building permit issued for a police services impact development expires prior to completion of the police services impact development for which it was issued, the applicant may within 90 days of the expiration of the building permit apply for a refund of the police services impact fee. Failure to timely apply for a refund of the police services impact fee shall waive any right to a refund.

(1) Upon receipt of application for a refund, and after verifying that the building permit has expired and that the police services impact development has not been completed, the city manager shall refund the police services impact fee paid for such police services impact development.

(2) A building permit, which is subsequently issued for a police services impact development on the same property which was the subject of a refund, shall pay the required police services impact fee.

(Ord. No. 02-18, § 7, 5-6-2002)

Sec. 30-898. - Use of monies.

(a) The city council hereby establishes separate accounting for the police services impact fees, to be designated as the "police services impact fee" which shall be maintained separate and apart from all other accounts of the city. All such impact fees shall be accounted for therein.

(b) The monies accounted for as "police services impact fee" shall be used solely for the purpose of providing growth-necessitated development improvements, additions, and capital equipment for the police services system in the city including, but not limited to:

(1) Design and development plan preparation;

(2) Permitting and fees;

(3) Development and design of police services system buildings or improvements and additions thereto;

(4) Design and development of new drainage facilities required by the development of police services system buildings, facilities or improvements and additions thereto;

(5) Relocating utilities required by the development of police services system buildings, facilities or improvements and additions thereto;

(6) Landscaping;

(7) Development management and inspection;

(8) Surveying, soils, and material testing;

(9) Acquisition of capital equipment for law enforcement and police protection;

(10) Acquisition of apparatus, equipment, or furniture necessary to expand the police services system.

(11) Repayment of monies transferred or borrowed from any budgetary fund of the city subsequent to the adoption of this division, which were used to fund development, acquisition of improvements and additions to the police services system;

(12) Payment of principal and interest, necessary reserves and costs of issuance under any bonds or other indebtedness issued by the city to fund growth impacted improvements and additions to the police services system subsequent to the adoption of this division;

(13) Reimbursement of police services impact fees due an applicant;

(14) Design and development of roadway improvements required by the police services system; and

(15) To the extent provided by law, reimbursement or refund of costs incurred by the city in the preparation of any update to the impact fee study, any amendments or supplements, and any other administrative costs incurred by the city.

(c) The monies deposited into the police services impact fee account shall be used solely to finance improvements and additions to the police services system required by growth as projected in the impact fee study.

(d) Any funds on deposit, which are not immediately necessary for expenditure, shall be invested by the city. All income derived from such investments shall be accounted for as the "police services impact fee" and used as provided herein.

(e) The police services impact fee collected pursuant to this division shall be returned to the then current owner of the property for which such fee was paid if such fees have not been expended or encumbered prior to the end of the fiscal year immediately following the sixth anniversary of the date upon which such fee was paid. Refunds shall be made only in accordance with the following procedure:

(1) The then-current owner shall petition the city manager for the refund prior to the end of the fiscal year immediately following the sixth anniversary of the date of the payment of the police services impact fee.

(2) The petition for refund shall contain:

a. A notarized sworn statement that the petitioner is the then-current owner of the property for which the impact fee was paid;

b. A copy of the dated receipt issued for payment of such fee or such other record as would indicate payment of such fee;

c. A certified copy of the latest recorded deed; and

d. A copy of the most recent ad valorem tax bill.

(3) Within three months from the date of receipt of a petition for refund, the city manager will advise the petitioner and the city council of the status of the impact fee requested for refund, and if such impact fee has not been expended or encumbered within its applicable time period, then it shall be returned to the petitioner. For the purposes of this section, fees collected shall be deemed to be spent or encumbered on the basis of the first fee in shall be the first fee out.

(f) Any owner entitled to a refund who fails to file a timely petition for a refund upon becoming eligible to do so shall be deemed to have waived any claim for a refund, and the city shall be entitled to retain and apply the impact fees for growth necessitated capital improvements and additions to the police services system.

(Ord. No. 02-18, § 8, 5-6-2002)

Sec. 30-899. - Alternative fee calculation.

(a) In the event an applicant believes that the impact to police services system resulting from his police services impact development is less than the fee established, such applicant may, prior to issuance of a building permit for such police services impact development, submit a calculation of an alternative police services impact fee to the city manager pursuant to the provisions of this section. Upon receipt of the alternative police services impact fee, the city manager shall schedule a hearing before the city council at a regularly scheduled meeting or a special meeting called for the purpose of reviewing the alternative police services impact fee and shall provide the applicant written notice of the time and place of the hearing.

(b) The alternative police services impact fee calculations shall be based on data, information or assumptions contained in this division and the impact fee study or an independent source, provided

that the independent source is a local study supported by a data base adequate for the conclusions contained in such study performed pursuant to a generally accepted methodology and based upon generally accepted standard sources of information relating to facilities planning, cost analysis and demographics.

(c) If a previously approved police services impact development project submitted, during its approval process, an alternative police services impact study substantially consistent with the criteria required by this section, and if such study is determined by the city council to be current, the police services system impact of such previously approved police services impact development shall be presumed to be as described in the prior study. In such circumstances, an alternative police services impact fee shall be established reflecting the impact described in the prior study. There shall be a rebuttable presumption that an alternative police services impact study conducted more than two years earlier is invalid.

(d) If the city council determines that the data, information and assumptions utilized by the applicant to calculate the alternative police services impact fee complies with the requirements of this section and that the alternative police services impact fee was calculated by the use of a generally accepted methodology, the alternative police services impact fee shall be paid in lieu of the fee set forth in section 30-909

(e) If the city council determines that the data, information and assumptions utilized by the applicant to calculate the alternative police services impact fee does not comply with the requirements of this section or that the alternative police services impact fee was not calculated by a generally accepted methodology, then the city shall provide to the applicant written notification of the rejection of the alternative police services impact fee and the reason therefor.

(f) Any applicant or owner who has submitted a proposed alternative police services impact fee pursuant to this section and desires the immediate issuance of a building permit shall pay prior to or at the time the request for hearing is filed the applicable police services impact fee. Said payment shall be deemed paid under "protest" and shall not be construed as a waiver of any right of review. Any difference between the amount paid and the amount due, as determined by the city council, shall be refunded to the applicant or owner.

(Ord. No. 02-18, § 9, 5-6-2002)

Sec. 30-900. - Exemptions.

The following shall be exempted from payment of the impact fees:

(1) Alterations or replacement of a dwelling unit or building with a new dwelling unit or building of the same size or use and which will not increase the square footage associated therewith.

(Ord. No. 02-18, § 10, 5-6-2002)

Sec. 30-901. - Changes of size and use.

Impact fees shall be imposed and calculated for the alteration, expansion or replacement of a building or dwelling unit or the development of an accessory building if the alteration, expansion or replacement of the building or dwelling unit or the development of an accessory building results in a land use determined to: (1) increase the number of dwelling units; (2) increase the square footage; or (3) change the land use so as to constitute a different impact fee land use category. The impact fee imposed under the applicable impact fee rate shall be calculated as follows:

(1) If the impact fees are calculated on land use and not square footage, the impact fees imposed shall be the impact fees due under the applicable impact fee rate for the impact fee land use category resulting from the alteration, expansion or replacement less the impact fee that would

be imposed under the applicable impact fee rate for the impact fee land use category prior to the alteration, expansion or replacement.

(2) In the event the square footage of a building is increased, the impact fee shall be calculated only for that increased square footage.

(3) The impact fee imposed for any accessory buildings shall be that applicable under the impact fee rate for the land use for the primary building.

(Ord. No. 02-18, § 11, 5-6-2002; Ord. No. 13-01, § 2, 1-7-2013; Ord. No. 14-06, § 1, 8-4-2014)

Sec. 30-902. - Vested rights.

(a) Any owner of land, which was the subject of a development order prior to the effective date of this division, may petition the city council for a vested rights determination, which would exempt the landowner from the provisions of this division. Such petition shall be evaluated by the city attorney and a decision made based on the following criteria:

(1) The existence of a valid, unexpired governmental act of the city authorizing the specific development for which a determination is sought;

(2) Expenditures or obligations made or incurred in reliance upon the authorizing governmental act that are reasonably equivalent to the fees required by this division;

(3) Other factors that demonstrate it is inequitable to deny the petitioner the opportunity to complete the previously approved development under the conditions of approval by requiring the petitioners to comply with the requirements of this division. For the purposes of this paragraph, the following factors shall be considered in determining whether it is inequitable to deny the petitioner the opportunity to complete the previously approved development:

a. Whether the injury suffered by the petitioner outweighs the public cost of allowing the development to go forward without payment of the impact fee required by this division; and

b. Whether the expenses or obligations for the development were made or incurred subsequent to the effective date of this division.

(b) The city attorney shall make a written determination as to whether the owner has established a vested right in the police services impact development and, if so, whether the development would exempt the owner from the provisions of this division.

(c) Any owner aggrieved by a decision of the city attorney pursuant to this section may request a review hearing on such decision.

(Ord. No. 02-18, § 12, 5-6-2002)

Sec. 30-903. - Affordable housing.

Consistent with the goals, objectives and policies contained in the housing element of the city's adopted comprehensive plan, all qualified affordable housing projects on Marco Island will be considered for waiver or deferment of local impact fees, including police service impact fees. Pursuant to the terms and conditions contained in the executed housing interlocal agreement, county housing and urban improvement staff will oversee the application process, and review and make recommendations concerning requests for county impact fee waiver or deferment for qualified housing projects. Any affordable housing project recommended for county impact fee waiver or deferment by county housing staff will be considered for police services impact fee waiver or deferment.

(Ord. No. 02-18, § 13, 5-6-2002)

Sec. 30-904. - Alternative collection method.

In the event the police services impact fee are not paid prior to the issuance of a building permit for the affected police services impact development, the city shall proceed to collect the police services impact fee as follows:

(1) The city shall serve, by certified mail, return receipt requested, a "notice of impact fee statement" upon the applicant at the address set forth in the application for building permit, and the owner at the address appearing on the most recent records maintained by the property appraiser of the city. The city shall also attach a copy of the "notice of impact fee statement" to the building permit posted at the affected police services impact development site if the building is under development. Service shall be deemed effective on the date the return receipt indicates the notice was received by either the applicant or the owner or the date said notice was attached to the building permit, whichever occurs first. The "notice of impact fee statement" shall contain the legal description of the property and shall advise the applicant and the owner as follows:

a. The amount due and the general purpose for which the police services impact fee was imposed;

b. That a hearing may be requested within 30 calendar days from the effective date of service of the notice of impact fee statement, by making application to the office of the city manager.

c. That the police services impact fee shall be delinquent if not paid and received by the city within 30 calendar days of the effective date of service of the notice of impact fee statement, excluding the date of receipt or if a hearing is not requested, and, upon becoming delinquent, shall be subject to the imposition of a delinquent fee and interest on the unpaid amount until paid; and

d. That in the event the police services impact fee become delinquent, a lien against the property for which the building permit was secured shall be recorded in the official records book of the city.

(2) The police services impact fee shall be delinquent if, within 30 calendar days from the effective date of service of the notice of impact fee statement, neither the impact fees have been paid and received by the city, nor a hearing is requested. In the event a hearing is requested, the impact fees shall become delinquent if not paid within 30 days from the date the city council determines the amount of impact fees due upon the conclusion of such hearing. Upon becoming delinquent, a delinquency fee equal to ten percent of the total impact fee imposed shall be assessed. Such total impact fee, plus delinquency fee, shall bear interest at the statutory rate for final judgments calculated on a calendar day basis, until paid.

(3) Should the police services impact fee become delinquent, the city shall serve, by certified mail return receipt requested, a "notice of lien" upon the delinquent applicant, if the building is under development at the address indicated in the application for the building permit, and upon the delinquent owner at the address appearing on the most recent records maintained by the property appraiser of the county. The notice of lien shall notify the delinquent applicant and delinquent owner that due to their failure to pay the police services impact fee, the city shall file a claim of lien with the clerk of the circuit court.

(4) Upon the mailing of the notice of lien, the city attorney shall file a claim of lien with the clerk of the circuit court for recording in the official records of the county. The claim of lien shall contain the legal description of the property, the amount of the delinquent impact fee and the date of its imposition. Once recorded, the claim of lien shall constitute a lien against the property described therein. The city attorney shall proceed expeditiously to collect, foreclose, or otherwise enforce said lien.

(5) After the expiration of one year from the date of recording of the claim of lien, as provided herein, a suit may be filed to foreclose said lien. Such foreclosure proceedings shall be

instituted, conducted and enforced in conformity with the procedures for the foreclosure of municipal special assessment liens, as set forth in F.S. ch. 173, which provisions are hereby incorporated herein in their entirety to the same extent as if such provisions were set forth herein verbatim.

(6) The liens for delinquent impact fees imposed hereunder shall remain liens, coequal with the lien of all state, county, district and municipal taxes, superior in dignity to all other filed liens and claims, until paid as provided herein.

(7) The collection and enforcement procedures set forth in the section shall be cumulative with, supplemental to and in addition to, all other applicable procedures provided in any other ordinances or administrative regulations of the city or any applicable law or administrative regulation of the state. Failure of the city to follow the procedure set forth in this section shall not constitute a waiver of its rights to proceed under any other ordinances or administrative regulations of the city or any applicable law or administrative regulation of the state.

(Ord. No. 02-18, § 14, 5-6-2002)

Sec. 30-905. - Developer contribution credit.

(a) The city shall grant a credit against the police services impact fee imposed by this division, for the development of any building facilities or improvements and additions thereto made to the police services system required pursuant to a development order or made voluntarily in connection with police services impact development. Such development shall be subject to the approval of the city manager and shall be an integral part of and a necessary accommodation to an existing or contemplated police services system.

(b) The amount of developer contribution credit to be applied shall be determined at the time that the police services impact fee is paid according to the following standards of valuation: the cost of anticipated development to the police services system shall be based upon professional opinions of probable cost certified by a professional architect or engineer.

(c) Prior to issuance of a building permit, the applicant shall submit to the city manager a proposed plan and estimate of costs for contributions to the police services system. The proposed plan and estimate shall include:

(1) A designation of the police services impact development for which the proposed plan is being submitted;

(2) A list of the contemplated police services system improvements contained within the plan;

(3) An estimate of proposed development costs certified by a professional architect or engineer; and

(4) A proposed time schedule for completion of the proposed plan.

(d) Upon receipt of the proposed plan, the city manager shall schedule a hearing before the city council, at a regularly scheduled meeting or a special meeting called for the purpose of reviewing the proposed plan, and shall provide the applicant or owner written notice of the time and place of the hearing.

(e) The city council shall determine:

(1) If such proposed plan of development is in conformity with contemplated police services additions to the police services system;

(2) If the proposed plan is consistent with the public interest; and

(3) If the proposed development time schedule for the completion of the plan is consistent with the city's capital improvement program for the police services system.

The decision of the city council as to whether to accept the proposed plan of development shall be in writing and issued within ten working days of the review. A copy shall be provided to the applicant. Upon approval of a proposed plan of development, the city council shall determine the amount of development credit based upon the above standards of valuation and shall approve the timetable for completion of development.

(f) All development cost estimates shall be based upon, and all development plans and specifications shall be in conformity with the police services development standards of the city. All plans and specifications shall be approved by the city manager prior to commencement of development.

(g) Any developer contribution credit granted from the police services impact fee shall only be for those donations or contributions made to a police services system.

(h) Any applicant who submits a proposed plan pursuant to this section and desires the immediate issuance of a building permit shall pay prior to or at the time the request for hearing is filed the applicable police services impact fee. Said payment shall be deemed paid under "protest" and shall not be construed as a waiver of any review rights. Any difference between the amount paid and the amount due, as determined by the city council, shall be refunded to the applicant or owner.

(i) In the event the amount of developer contribution determined to be applicable by the city council pursuant to an approved plan of development exceeds the total amount of impact fees due by the applicant based upon the contemplated improvements to the police services system proposed by the applicant, the city shall execute with the applicant an agreement for future reimbursement of the excess of such contribution credit from future receipts by the city of police services impact fees. Such agreement of reimbursement shall not be for a period in excess of five years from the date of completion of the approved plan of development and shall provide for a forfeiture of any remaining reimbursement balance at the end of such five-year period.

(Ord. No. 02-18, § 15, 5-6-2002)

Sec. 30-906. - Review hearings.

(a) An applicant or owner who is required to pay a police services impact fee, shall have the right to request a review hearing.

(b) Such hearing shall be limited to the review of the following:

(1) The application of the police services impact development.

(2) A vested rights determination under this division.

(3) The denial of an affordable housing waiver or authorization for deferral pursuant to this division.

(c) Such hearing shall be requested by the applicant or owner within 30 days of the date of first receipt of the following:

(1) Notice of impact fee statement;

(2) A vested rights determination;

(3) The denial of an affordable housing waiver or authorization for deferral.

Failure to request a hearing within the time provided shall be deemed a waiver of such right.

(d) The request for hearing shall be filed with the office of city manager and shall contain the following:

(1) The name and address of the applicant or owner;

(2) The legal description of the property in question;

(3) If issued, the date the building permit was issued;

(4) A brief description of the nature of the development being undertaken pursuant to the building permit;

(5) If paid, the date the police services impact fee was paid; and

(6) A statement of the reasons why the applicant or owner is requesting the hearing.

(e) Upon receipt of such request, the city manager shall schedule a hearing before the city council at the regularly scheduled meeting or a special meeting called for the purpose of conducting the hearing and shall provide the applicant or owner written notice of the time and place of the hearing. Such hearing shall be held within 45 days of the date the request for hearing was filed.

(f) Such hearing shall be before the city council and shall be conducted in a manner designed to obtain all information and evidence relevant to the requested hearing. Formal rules of civil procedure and evidence shall not be applicable; however, the hearing shall be conducted in a fair and impartial manner with each party having an opportunity to be heard and to present information and evidence.

(g) Any applicant or owner who requests a hearing pursuant to this section and desires the immediate issuance of a building permit, or if a building permit has been issued without the payment of the police services impact fee, shall pay prior to or at the time the request for hearing is filed the applicable impact fees. Said payment shall be deemed paid under "protest" and shall not be construed as a waiver of any review rights.

(h) An applicant or owner may request a hearing under this section without paying the applicable impact fee but no building permit shall be issued until such impact fees are paid in the amount initially calculated or the amount approved upon completion of the review provided in this section.

(Ord. No. 02-18, § 16, 5-6-2002)

Sec. 30-907. - Review requirement.

This division and the impact fee study shall be reviewed at least every five years. The initial and each review shall consider new estimates of population and other socioeconomic data; changes in development, land acquisition and related costs and adjustments to the assumptions, conclusions or findings set forth in the study. The purpose of this review is to evaluate and revise, if necessary, the police services impact fee to assure that they do not exceed the reasonably anticipated costs associated with the improvements and additions necessary to offset the demand generated by the police services impact development on the police services system. In the event the review of the article required by this section alters or changes the assumptions, conclusions, and findings of the study adopted by reference, revises or changes the police services system or alters or changes the amount of impact fees, the study adopted by reference shall be amended and updated to reflect the assumptions, conclusions, and findings of such reviews and shall be amended to adopt by reference such updated studies.

(Ord. No. 02-18, § 17, 5-6-2002)

Sec. 30-908. - Declaration of exclusion from Administrative Procedures Act.

Nothing contained in this division shall be construed or interpreted to include the city in the definition of agency contained in F.S. § 120.52, or to otherwise subject the city to the application of the Administrative Procedure Act, F.S. ch. 120. This declaration of intent and exclusion shall apply to all proceedings taken as a result of or pursuant to this division including specifically, but not limited to, consideration of a petition for vested rights determination, a determination of entitlement to an impact fee waiver or authorization for deferral, and a review hearing.

(Ord. No. 02-18, § 18, 5-6-2002)

Sec. 30-909. - Appendix A, impact fee rates.

Land Use	Total Police Cost Per Unit of Development
Residential:	
Single-family	184.96 per dwelling unit
Multifamily	76.40 per dwelling unit
Nonresidential:	
Lodging:	
Hotel/Motel	227.89 per room
Medical:	
Hospital/Clinics	0.41 per square foot
Commercial:	
Office	0.21 per square foot
Retail	0.61 per square foot
Restaurant/Lounge	1.51 per square foot
Industrial/Manufacturing	0.24 per square foot
Leisure/Outdoors	0.95 per square foot
Institutions:	
Church	0.09 per square foot
School/College	0.67 per square foot

Government/Public Bldg.	0.65 per square foot

(Ord. No. 02-18, § 19, 5-6-2002)

Secs. 30-910—30-930. - Reserved.

ARTICLE XIV. - VEGETATION REMOVAL AND PROTECTION

Sec. 30-931. - Purpose and intent.

The purpose of this division is the protection of existing vegetation within the city by regulating its removal; to assist in the control of flooding, soil erosion, dust, heat, air pollution and noise; to maintain property, aesthetic and health values within the city; to limit the use of irrigation water in open space areas by promoting the preservation of existing plant communities; to limit the removal of existing viable vegetation when no landscape plans have been prepared for the site. It is not the intent of this division to restrict the mowing of nonprotected vegetation in order to meet the requirements of other sections of this code.

(Ord. No. 02-23, § 1, 9-3-2002)

Sec. 30-932. - Applicability.

For the purpose of this article, unless listed under exemptions of this code, it shall be unlawful to remove or cause to be removed, native and/or exotic species of vegetation without first obtaining a vegetation removal permit and/or an exotic vegetation removal permit from the community development director.

For the purpose of this article, native vegetation references shall meet the statutory definitions and/or lists found in the state division of forestry, the state department of agriculture and the state department of natural resources. References to a specimen tree(s) in this ordinance shall refer to any tree(s) listed under the U.S. Endangered Species Act, Section 6.

Properties may be subject to provisions contained in the final Deltona Settlement Agreement (1982) which could affect the applicability of this ordinance. It is incumbent upon the property owner to ascertain whether their property is within the settlement area, and to know what limitations may apply subject to the settlement agreement. Inclusion of property in the settlement area may not relieve the owner of other jurisdictional, statutory or agency requirements.

(Ord. No. 02-23, § 2, 9-3-2002)

Sec. 30-933. - Exemptions.

A generalized vegetation removal permit is not required for the removal of protected vegetation other than specimen trees when one of the following conditions is met:

(1) A building permit has been issued for the principal structure.

(2) The principal structure has been constructed, and the property owner or authorized agent is conducting the removal.

(3) Property zoned agriculture (A) where the property is to be used for a bona fide agricultural use as defined by the land development code and application for an agricultural clearing permit has been filed with and approved by the community development director.

(4) A site plan and vegetation protection plans have been reviewed and approved by the community development director as part of the final development order.

(5) A state licensed tree farm/nursery, where such vegetation is intended for sale in the ordinary course of the licensee's business and was planted for the described purpose.

(6) A state licensed land surveyor in the performance of his/her duties, provided such removal is for individual trees within a swatch less than three feet in width.

(7) Mangrove alteration projects that are exempted from state department of environmental protection permit requirements by F.A.C. 17-321.060.

(8) The city planning board may grant a variance to the provisions of this section if compliance with the mangrove tree preservation standards of this division would impose a unique and unnecessary hardship on the owner or any other person in control of affected property. Relief shall be granted only upon demonstration by the landowner or affected party that such hardship is peculiar to the affected property and not self-imposed, and that the grant of a variance will be consistent with the intent of this article and the comprehensive plan.

(Ord. No. 02-23, § 3, 9-3-2002)

Sec. 30-934. - Vegetation removal permit application requirements.

(a) The community development director shall not issue a vegetation removal permit until all applicable federal, state, and local approvals have been obtained. These approvals may include, but are not limited to:

(1) Building permits.

(2) Special treatment (ST) development permits.

(3) U.S. Army Corps of Engineers permits/exemptions.

(4) State department of environmental protection permits/exemptions.

(5) South Florida Water Management District permits/exemptions.

(6) Other applicable agency reviews/permits/exemptions.

(7) Other city approvals.

(b) Application for a vegetation removal permit shall be submitted to the community development director in writing on a form provided by the community development department. The application shall include the following information:

(1) A generalized vegetation inventory, based upon the most current available information, shall show the approximate location and extent of vegetation upon the site. For nonresidential and multifamily development, the inventory may be in the form of an aerial or a field survey, and may be accompanied by photographs or videotapes illustrating typical areas of vegetation referenced to positions on the aerial or survey.

(2) A brief written inventory assessment and evaluation of the plant communities that have been identified on the site shall be prepared by a person knowledgeable in the identification and evaluation of vegetative resources, such as a forester, biologist, ecologist, horticulturist, landscape architect, or certified nurseryman. The assessment shall include an evaluation of

character and quality of the plant communities identified, including their rarity, viability, and such other physical characteristics and factors that may affect their preservation.

(3) A site plan which includes:

a. Property dimensions.

b. Location of existing infrastructures and alterations.

c. Location of proposed structures, infrastructure and alterations.

d. The location and species of all protected vegetation. Large stands of a single species, such as mangroves, may be indicated as a group with an approximate number or area.

e. Specific identification of all specimen trees.

f. Designation of all protected vegetation proposed for removal.

g. Location of detail of protective barricading of the vegetation to be retained.

h. Description of any proposed alteration of mangroves.

i. Description of any proposed maintenance trimming of mangroves.

(4) An executed statement that includes:

a. Name, address, and phone of property owner.

b. Name, address, and phone of authorized agent and on-site representative.

c. Proof of ownership.

d. Legal description.

e. Reason for proposed removal.

f. Method to distinguish vegetation to be removed from vegetation to be preserved and method of removal. It should be noted that the root system of the vegetation shall also be protected.

g. Signature of property owner or copy of a specific contract signed by property owner.

(5) Vegetation relocation plan. If vegetation relocation is proposed by the applicant prior to site development plan, construction plan or other final approvals, a vegetation relocation permit (vegetation removal permit) may be issued by the community development director provided that it can be demonstrated that early transplantation will enhance the survival of the relocated vegetation. A vegetation relocation plan shall document methods of relocation, timing of relocation, watering provisions, maintenance and other information as required by the development services director.

(Ord. No. 02-23, § 4, 9-3-2002)

Sec. 30-935. - Review procedures.

(a) Issuance of permit. Based on the information contained in the application and obtained from the on-site inspection, the community development director may approve or deny an application. An approved vegetation removal permit is valid for a period not to exceed 180 days except for mangrove alteration. Mangrove alteration permits shall be valid for the date of issuance by the state department of environmental protection. An extension requested prior to expiration of the original permit may be granted for good cause shown upon written application to the community development director. The community development director may attach conditions to the permit relative to the methods of designating and protecting vegetation not proposed for removal. A violation of these conditions shall be cause to void the vegetation removal permit.

(b) Denial of permit. In the event the community development director denies an application, the reason(s) shall be noted on the application and returned promptly.

(c) Permit fees. All vegetation removal and clearing permit applications requiring review and approval shall be charged a review fee unless specifically exempted by the community development director pursuant to this code. The city council shall establish and adopt, by resolution, a schedule of fees for vegetation removal, review and approval permits. The schedule of fees and the resolution establishing such fees shall be on file with the city clerk. The schedule of fees may be changed by resolution of the city council.

(Ord. No. 02-23, § 5, 9-3-2002)

Sec. 30-936. - Prohibited exotic vegetation removal.

(a) Exotic vegetation removal is unlawful without first obtaining a permit. A vegetation removal fee shall not be required to remove currently listed prohibited exotic vegetation. Prior to issuance of a building permit, prohibited exotic vegetation may be removed from lots which are zoned residential single-family (RSF), and mobile home (MH).

(b) (1) The city may require an adjoining property owner(s) to remove prohibited exotic species from adjacent properties at the time a building permit is issued. And further, the city shall require property owners to remove exotic species that are deemed to present a threat to public health, safety, and welfare. The following list is an example of exotic vegetation found on Marco Island:

a. Australian Pine (Casuarina spp.).

b. Melaleuca (Melaleuca spp.).

c. Brazilian Pepper (Schinus terebinthifolius).

d. Earleaf Acacia (Acacia auriculiformis).

e. Catclaw Mimosa (Mimosa pigra).

f. Java Plum (Syzygium cumin).

g. Downy Rosemyrtle (Rhodomytrus tomentosus).

h. Women's Tongue (Albizia lebbeck).

(2) Prohibited exotic vegetation removal and methods of removal shall be conducted in accordance with the specific provisions in each local development order.

(3) Protection of native vegetation shall be required during prohibited exotic vegetation removal.

(4) Prohibited exotic vegetation shall be removed:

a. From all rights-of-way, common area tracts not proposed for development and easements prior to preliminary acceptance of the phase of the required subdivision improvements;

b. From within the associated phase of the final site development plan prior to the issuance of a certificate of occupancy.

c. From single-family and two-family lots for all new principal dwelling units before a certificate of occupancy is granted. The removal of prohibited exotic vegetation shall be required in perpetuity.

(5) Verification of prohibited exotic vegetation removal shall be performed by the community development director's field representative.

a. Herbicides utilized in the removal of prohibited exotic vegetation shall have been approved by the U.S. Environmental Protection agency.

b. When prohibited exotic vegetation is removed, but the base of the vegetation remains, the base shall be treated with an U.S. Environmental Protection Agency approved herbicide and a visual tracer dye shall be applied.

(6) A maintenance plan shall be submitted to the community development director for review on sites which require prohibited exotic vegetation removal prior to the issuance of the local development order. This maintenance plan shall describe specific techniques to prevent reinvasion by prohibited exotic vegetation of the site in perpetuity. This maintenance plan shall be implemented on a yearly basis at a minimum.

(Ord. No. 02-23, § 6, 9-3-2002)

Sec. 30-937. - Vegetation protection and removal.

(a) Vegetation protection. In general, during construction, cut and fill activities, land alteration, construction material storage, driving or parking of equipment, or trenching, all reasonable steps necessary to prevent the destruction or damaging of vegetation and public and private trees on city owned property shall be taken, including the installation of protective barriers. All new development not specifically exempted by this article shall retain existing native vegetation to the maximum extent possible, especially where said native vegetation exists within required buffer areas. Vegetation destroyed or receiving major damage must be replaced by vegetation of equal environmental value, as specified by the city manager or designee, before occupancy or use unless approval for their removal has been granted under permit.

(1) Filling and construction debris. During construction, unless otherwise authorized in the vegetation removal permit, no excess soil, additional fill, equipment, liquids, signs or construction debris shall be placed within the dripline of any vegetation or public and private trees on city owned property that is required to be preserved in its present location.

(2) Attachments. Unless otherwise authorized by the vegetation removal permit, no attachments or wires other than those of a protective or nondamaging nature shall be attached to any vegetation and public and private trees on city owned property during construction.

(3) Excavation. Unless otherwise authorized by the vegetation removal permit, no soil is to be removed from within the dripline of any vegetation or public and private trees on city owned property that are to remain in their original location.

(4) Protective barriers. All protective barriers shall be installed and maintained for the period of time beginning with the commencement of any phase of land clearing construction activities, cut and fill activities, land alteration, construction material storage, driving or parking of equipment, trenching or building operations and ending with the completion of that phase of the construction work on the site, unless otherwise approved to be removed by the city manager or designee's field representative. All protective barriers shall be installed pursuant to the Tree Protection Manual for Builders and Developers, Division of Forestry, State of Florida, or other methods approved by the city manager or designee.

a. Areas to be preserved shall be protected during land alteration, construction activities, cut and fill activities, construction material storage, driving, parking of equipment or trenching, by placing a continuous barrier around the perimeter of the area of vegetation and public and private trees on city owned property to be preserved. This barrier shall be highly visible and constructed of wood stakes set a maximum of eight feet apart, at a height of four feet, all covered continuously with brightly colored, all-weather mesh material or equal-type barrier method. An equivalent method may be substituted with the approval of the city manager or designee.

b. When the preservation of single trees is required by this Code, a protective barrier shall be placed around the tree at a distance from the trunk of six feet or beyond the dripline,

whichever is greater, or as otherwise approved by the city manager or designee's field representative.

(5) Equipment. No equipment, waste or materials including, but not limited to, paints, oils, solvents, asphalt, concrete, mortar shall be cleaned or stored within the dripline on any public or private trees on city owned property.

(6) De-watering. During de-watering activities, the discharge from de-watering shall be directed in a manner that does not cause standing water to accumulate at the base of any public or private trees on city owned property.

(7) Silt barriers. Silt barriers, hay bales, or similar effective erosion silt control barriers shall be required in any area where erosion or siltation may cause damage to any public and private trees on city owned property.

(8) Inspections. The city manager or designee shall conduct periodic inspections of the construction site in order to ensure compliance with this section.

(Ord. No. 02-23, § 7, 9-3-2002; Ord. No. 09-14, § 5, 10-19-2009)

Sec. 30-938. - Restoration and penalties.

(a) Restoration standards. The person(s) responsible for violations of the environmental sections of this article shall be notified according to this article and shall have 30 days to prepare a mitigation plan that is acceptable to the city to resolve the violation. The mitigation plan shall be submitted to the community development director and/or staff for review and comment. Once the community development director accepts the plan, the responsible party shall have 15 days to complete the mitigation unless other arrangements are specified and agreed upon in the mitigation plan.

(1) Requirements for a mitigation plan:

a. A copy of the deed, contract for sale or agreement for sale or a notarized statement of ownership clearly demonstrating ownership and control of the subject lot or parcel of land, or permission from the landowner to mitigate on his or her site shall be provided.

b. The mitigation plan shall be prepared by a person who meets or exceeds the credentials specified in this article.

c. The plan shall designate the person's name, address and telephone number that prepared the plan.

d. A north arrow, scale, and date shall be required on the plan.

e. Existing vegetation areas shall be shown.

f. The proposed planting areas shall be clearly defined.

g. The plan shall denote the number and location of each plant to be planted, or for the case of ground covers, show them in groupings. Large mitigation areas may be designated by a more simplified method.

h. All plants proposed shall be denoted by genus, species, and the common name.

i. The plan shall identify what is adjacent to the mitigation areas, i.e. existing forest (provide type), farm, natural buffer area, lake, etc.

(2) The mitigation plan shall include the following minimum planting standards:

a. In the successful replacement of trees illegally removed, replacement trees shall be of sufficient size and quantity to replace the diameter at breast height (dbh) inches removed. In addition, the understory vegetation shall be restored to the area from which protected trees were unlawfully removed. The selection of plants shall be based on the

characteristics of the Florida Land Use, Covers and Form Classifications System (FLUCCS) Code. Shrubs, ground cover, and grasses shall be restored as delineated in the FLUCCS Code. The species utilized shall be with relative proportions characteristic of those in the FLUCCS Code. The exact number and type of species required may also be based upon the existing indigenous vegetation on the adjacent property at the discretion of the community development director. (Dbh is defined for the purposes of this article as diameter of the tree, measured at a height of 4.5 feet above natural grade.)

b. Each replacement tree shall be native Florida grade no. 1 as graded by the state department of agriculture and consumer services, grades and standards for nursery plants. All plants not listed in this manual shall conform to FL no. 1 as to health and vitality, conditions of foliage, root system and free of pest or mechanical damage.

c. All replacement trees shall be nursery grown, containerized and at a minimum be seven to eight feet in height, have minimum caliper of one to 1½ inches at 12 inches above natural grade.

d. Replacement trees shall have a guarantee of 80 percent survivability for a period of not less than three years. A maintenance provision of not less than three years must be provided in the restoration plan to control invasion of currently listed exotic vegetation.

e. It shall be at the discretion of the community development director to allow for any deviation from the above specified ratio.

(3) In the event that identification of the species of trees is impossible for any reason on the property where protected trees were unlawfully removed, it shall be presumed that the removed trees were of a similar species mix as those found on adjacent properties.

(4) If the unlawful removal of trees has caused any change in hydrology, ground elevations or surface water flows, then the hydrology, ground elevation or surface water flows shall be restored to pre-violation conditions.

(5) In the event of impending development on property where protected trees were unlawfully removed, the restoration plan shall indicate the location of the replacement stock consistent with any approved plans for subsequent development. For the purposes of this article, impending development shall mean that a developer has made application for a development order or has applied for a building permit.

(6) The community development director may, at his discretion, allow the replacement stock to be planted off-site where impending development displaces areas to be restored. In such situations, off-site plantings shall be on lands under the control of a public land and/or agency. The off-site location shall be subject to the approval of the community development director.

(7) The donation of land and/or of funds under the control of a public agency may be made if none of the above are viable alternatives. This donation of land and/or funds shall be equal to or grater than the total sum it would cost to restore the area in which the violation occurred. (Preservation of different contiguous habitats is to be encouraged.)

(8) The existing soil types shall be identified. Plants proposed for planting shall be compatible with the soil type. The 1954 or the 1992 soil survey of Collier County shall be used to determine if the plants proposed for planting are compatible with the existing or proposed soil types.

(9) The source and method of providing water to the plants shall be indicated on the plan and subject to review and approval.

(10) A program to control prohibited exotic vegetation in the mitigation area shall be required.

(11) City review of mitigation plan.

a. The community development department will review the plan based on, but not limited to, the preceding requirements within 15 days. Additional relevant information may be required when requested.

b. Should the city reject the mitigation plan, the reasons will be provided so the applicant can correct the plan and resubmit for city review.

(12) Monitoring and replanting.

a. A monitoring program shall be required that would determine the survivability by species of the plants used in the mitigation effort. A minimum of five reports will be submitted. Reports shall be due at one-year intervals.

b. Eighty percent survival by species shall be required for a five-year period unless other arrangements are specified and agreed upon in the mitigation plan. Replanting shall be required each year if the mortality exceeds 20 percent of the total number of each species in the mitigation plan.

c. The soil and hydrological conditions for some mitigation areas may favor some of the plants and preclude others. Should the city and/or consultant find that over time, some of the species planted simply do not adjust, both the consultant and the city shall reevaluate the mitigation plan, and a revised plan will be instituted. This condition shall not apply to all mitigation areas and each case will be evaluated individually, based on the supporting data submitted by the mitigator.

(b) Penalties, fines and imprisonment. Any person violating any provisions of this code or the conditions of a permit issued here under, and not specifically covered in this article, shall constitute a misdemeanor and each protected living, woody plant, constituting protective vegetation, removed in violation of this code shall constitute a separate and distinct offense and upon conviction shall be punished by a fine not to exceed $500.00 per violation or by imprisonment in the county jail not to exceed 60 days, or by both such fine and imprisonment. In addition to or in lieu of the penalties provided by general law for violation of ordinance, the city council may bring injunctive action to enjoin the removal of vegetation in violation of this code.

(Ord. No. 02-23, § 8, 9-3-2002)

Sec. 30-939. - Appeal from enforcement.

Any person, who feels aggrieved by the application of this division, may file, within 30 days after said grievance, a petition with the community development director, to have the case reviewed by the city code enforcement board.

(Ord. No. 02-23, § 9, 9-3-2002)

Sec. 30-940. - Suspension of permit requirement.

The city council may, by emergency resolution, suspend the permit requirement for vegetation removal in the aftermath of a natural disaster, such as a hurricane, when the following conditions are met and contained in the resolution:

(1) The suspension is for a defined period of time not to exceed 30 days or as otherwise set by the city council.

(2) The vegetation removal is necessitated by disaster related damage.

(3) The suspension is not applicable to vegetation within habitats containing listed species.

(4) The vegetation to be removed is not a specimen tree.

(Ord. No. 02-23, § 10, 9-3-2002)

Secs. 30-941—30-960. - Reserved.

ARTICLE XV. - ENVIRONMENTAL IMPACT STATEMENT (EIS) AND SPECIAL TREATMENT OVERLAY (ST) DISTRICT STANDARDS

Sec. 30-961. - Purpose and intent.

(a) The purpose of this division is to provide a method to objectively evaluate the impact of a proposed development, site alteration, or project upon the resources and environmental quality of the project area and the community and to insure that planning and zoning decisions are made with a complete understanding of the impact of such decisions upon the environment, to encourage projects and developments that will:

(1) Protect, conserve and enhance, but not degrade, the environmental quality and resource of the particular project or development site, the general area and the greater community.

(2) Minimize the future reduction in property values likely to result, or be caused by improperly designed and executed projects and developments.

(3) Reduce the necessity for expenditure of public funds in the future for rehabilitating the environmental quality of areas of environmental sensitivity.

(b) Further, it is the purpose of this division to attain the widest range of beneficial uses of the environment without degradation of environmental advantages and risk to public health, safety, welfare and other undesirable consequences.

(c) Properties may be subject to provisions contained in the final Deltona Settlement Agreement (1982) which could affect the applicability of this code. It is incumbent upon the property owner to ascertain whether their property is within the settlement area, and to know what limitations may apply subject to the settlement agreement. Inclusion of property in the settlement area may not relieve the owner of other jurisdictional, statutory or agency requirements.

(Ord. No. 02-24, § 1, 9-3-2002)

Sec. 30-962. - Applicability; environmental impact statement (EIS) required.

It shall be unlawful and no building permit, conditional use, zoning change, subdivision or other permit approval for development or site alteration shall be issued without first obtaining approval of an EIS, or exemption pursuant to this article, as required by this code:

(1) Any site over ten acres with a ST overlay designation.

(2) All sites seaward of the coastal construction control line (CCCL) that are 2.5 or more acres.

(3) All sites landward of the coastal construction control line (CCCL) that are ten or more acres.

(4) Any other development or site alteration, which in the opinion of the community development director, would have substantial impact upon environmental quality and which is not specifically exempted in this code. In determining whether such a project would have substantial environmental impact the community development director shall base his decision on the terms and conditions described in this code and on the project's consistency with the comprehensive plan.

(Ord. No. 02-24, § 2, 9-3-2002)

Sec. 30-963. - Submission and review of EIS.

A completed EIS, signed by the property owner or his designated agent, shall be submitted to the community development director for approval, denial or approval with modifications. No development or site alteration will be started without this approval and permits required by law. Failure to provide full and complete information shall be grounds for denial of the application. The author(s) of the EIS shall provide evidence, by academic credentials or experience, of his/her expertise in the area of environmental sciences or natural resource management. Academic credentials shall be a bachelor's or higher degree in one of the biological sciences. Experience shall reflect at least three years, two years of which shall be in the state, of ecological or biological professional experience if substituting for academic credentials.

(Ord. No. 02-24, § 3, 9-3-2002)

Sec. 30-964. - Information required for application.

(a) Applicant information.

(1) Responsible owner(s)/agent(s) who wrote the EIS and his/her education and job related environmental experience.

(2) Owner(s)/agent(s) name, address.

(3) Affidavit of proof of authorized agent.

(b) Development and site alteration information.

(1) Description of proposed use.

(2) Legal description of site.

(3) Location and address description.

(c) Mapping and support graphics.

(1) General location map.

(2) Native habitats and their boundaries shall be identified on an aerial photograph of the site extending at least 200 feet outside the parcel boundary. This does not mean the applicant is required to go on to adjacent properties. Habitat identification will be consistent with the state department of transportation Florida Land Use Cover and Forms Classification System and shall be depicted on an aerial photograph having a scale of one inch equal to at least 400 feet is acceptable. Information obtained by ground-truthing surveys shall have precedence over information presented through photographic evidence.

(3) Topographic map showing upland, bathymetric contours and existing drainage patterns if applicable.

(4) Existing land use of site and surrounding area.

(5) Soils map at scale consistent with that used for state department of transportation Florida Land Use Cover and Forms Classification System determinations.

(6) Proposed drainage plan indicating basic flow patterns, outfall and off-site drainage.

(7) Development plan including phasing program, service area of existing and proposed public facilities, and existing and proposed transportation network in the impact area.

(d) Impact categories.

(1) Biophysical.

a. Air quality.

1. Changes in level of air pollutants as defined by current regulations.
2. Number of people that will be affected by air pollution resulting from the project.
3. Procedures that will be used to reduce adverse impacts of air pollution.

b. Water quality.

1. Changes in levels and types of water pollution as defined by current regulations.
2. Inventory of water uses that are restricted or precluded because of pollution levels resulting from this project.
3. Person affected by water pollution resulting from the project.
4. Project designs and actions, which will reduce adverse impacts of water pollution.

c. Physiography and geology.

1. A description of the soil types found in the project area.
2. Aerial extent of proposed topographic modification through excavation, dredging and filling.
3. Removal and/or disturbance of natural barriers to storm waves and flooding.
4. Proposed modifications to natural drainage patterns.
5. Extent of impervious surface and percent of groundwater recharge area to be covered.
6. Annual draw down of groundwater level resulting from use.
7. Increased siltation in natural water bodies resulting from the proposed use.

d. Wetlands.

1. Define number of acres of city jurisdictional wetlands by vegetation type (species), vegetation composition (canopy, midstory and ground cover), vegetation abundance (dominant, common and occasional), and their wetland functions.
2. Determine present seasonal high water levels and historical high water levels by utilizing lichen lines or other biological indicators.
3. Indicate proposed percent of defined wetlands to be impacted and the effects of proposed impacts on functions of wetland areas.
4. Indicate proposed percent of defined wetlands to be impacted and the effects of proposed impacts on functions of wetland areas.
5. Indicate how the project design minimizes impacts on wetlands.
6. Indicate how the project design shall compensate for the wetland impacts.

e. Upland utilization and species of special status.

1. Define number of acres of uplands by vegetative type (species), vegetation composition (canopy, midstory, and ground cover), vegetation abundance (dominant, common and occasional) and their upland functions.
2. Indicate proposed percent of defined uplands to be impacted and the effects of proposed impacts on functions of upland areas.
3. Indicate how the project design minimizes impacts on uplands.
4. Provide a plant and animal species survey to include at a minimum, species of special status that are known to inhabit biological communities similar to those existing on-site

and conducted in accordance with the guidelines of the state fish and wildlife conservation commission.

5. Indicate how the project design minimizes impacts on species of special status (endangered, threatened and species of special concern).

f. Marine and estuarine resources.

1. Provide current State of Florida classification of the waters (F.A.C. ch. 17-3).

2. Define number of acres of marine and estuarine resources by submerged grass beds, breeding areas and nursery areas and their marine and estuarine functions.

3. Indicate proposed percent of defined marine and estuarine resources to be impacted and the effects of proposed impacts on functions of marine and estuarine resources.

4. Estimate changes in the dockside landing of commercial fish and shellfish.

5. Estimate changes in the sport fishing effort and catch.

6. Provide past history of any environmental impacts to the area including oil spills.

7. Indicate how the project design minimizes impacts on marine and estuarine resources.

8. Indicate how the project design shall replace the lost marine and estuarine functions.

g. Noise.

1. Describe the changes in decibels and duration of noise generated during and after the project (both day and night) that will exceed city regulations.

2. Describe steps that will be taken to reduce noise levels during and after project.

(2) Public facilities and services.

a. Wastewater management.

1. Describe existing treatment facilities as to capacity, percent capacity being uses, type of treatment and degree of treatment.

2. If applicable, describe similar features of proposed new treatment facilities.

3. Describe the character and fate of both liquid and solid effluents.

b. Water supply.

1. Estimate of average daily potable and nonpotable water demands by the project.

2. Source of the raw water supply.

3. Analysis of on-site treatment systems relative to state and county standards.

c. Solid wastes.

1. Estimate of average daily volume of solid wastes.

2. Proposed method of disposal of solid wastes.

3. Any plans for recycling or resource recovery.

d. Recreation and open spaces.

1. Acreage and facilities demand resulting from the new use.

2. Amount of public park/recreation land donated by the developer.

3. Management plans for any open water areas if one-half acre or more within the project.

4. Plans for recreational development by the developer on dedicated lands.
5. Amount of public recreation lands removed from inventory by the new use.
6. Development and/or blockage of access to public beaches and waters.

e. Aesthetic and cultural factors.

1. Provide documentation from the Florida Master Site File, department of state and any printed historic archaeological surveys that have been conducted on the project area.
2. Locate any known historic or archaeological sites and their relationships to the proposed project design.
3. Demonstrate how the project design preserves the historic/archaeological integrity of the site.
4. Indicate any natural scenic features that might be modified by the project design and explain what actions shall be utilized to preserve aesthetic values.
5. Provide the basic architectural and landscaping designs.

f. Monitoring. Describe the design and procedures of any proposed monitoring during and after site preparation and development.

(Ord. No. 02-24, § 4, 9-3-2002)

Sec. 30-965. - Specifics to address.

The statement should specifically address the following:

(1) Indicate how the proposed project has incorporated the natural, aesthetic and cultural resources and other environmental considerations in the planning and design of the proposed project.

(2) List the environmental impact(s) of the proposed action and the reason(s) that the impact(s) are unavoidable and that the impact(s) represent the minimum impacts possible to the environmental quality of the site and/or the surrounding area, which might be affected by the proposed use.

(3) Provide substantiated alternatives to the proposed project so that reasons for the choice of a course of action are clear, not arbitrary or capricious.

(4) List immediate short term and long-term impacts to the environment.

(5) List any irreversible and irretrievable commitments of natural resources which would be involved in the proposed action should it be implemented.

(Ord. No. 02-24, § 5, 9-3-2002)

Sec. 30-966. - Additional data.

The community development director may require any additional data or information necessary in order to make a thorough and exact evaluation of the EIS.

(Ord. No. 02-24, § 6, 9-3-2002)

Sec. 30-967. - Exemptions.

(a) Single-family or duplex use on a single lot or parcel. Exemption shall not apply to any parcel with a ST overlay, unless otherwise exempted by this code.

(b) Any area or parcel of land, which due to prior human intervention, is no longer considered an area of environmental sensitivity. Such a determination shall be rendered by the community development director or designee.

(Ord. No. 02-24, § 7, 9-3-2002)

Sec. 30-968. - Relation between EIS and development of regional impact (DRI).

In any instance where the proposed project requires both an EIS and a DRI, their data may be embodied in one report provided such report includes all the required information on both the EIS and DRI.

(Ord. No. 02-24, § 8, 9-3-2002)

Sec. 30-969. - Special treatment overlay.

(a) Continuation of ST overlay district. An overlay zoning district classification known as the ST special treatment overlay district, and currently designated on the official zoning atlas by the symbol "ST" together with the symbol of the basic zoning district which it overlays, is hereby acknowledged and accepted. This overlay district classification will be used for those lands of environmental sensitivity and historical and archaeological significance where the essential ecological or cultural value of the land is not adequately protected under the basic zoning district regulations established by this code or by ordinance.

(b) Continuation of P-ST overlay district. For purposes of identifying existing land from which the residential development rights have been transferred, such land is designated on the official zoning atlas by affixing the letter "P" for preservation to the symbol "ST," thusly "P-ST." Any new designation shall be placed on the land after the city council has accepted the deed and/or guarantee to said property.

(Ord. No. 02-24, § 9, 9-3-2002)

Sec. 30-970. - Permissible uses on ST lands.

(a) Land designated ST shall be used only for the permitted principal use, the permitted accessory use, and/or the permitted conditional use under the basic underlying zoning district classification of such land. In all other cases, temporary uses, may be permitted.

(b) The consideration of an application for a permitted conditional use shall be subject to a public hearing. This hearing may run concurrently with any public hearing required by this section or may be held at a separate time.

(c) The fact that a use is permitted under the basic zoning district classification shall confer no right to the property owner for such use unless such use is specifically approved as a condition of approval of a site alteration plan and/or site development plan as provided in this land development code.

(Ord. No. 02-24, § 10, 9-3-2002)

Sec. 30-971. - Exceptions and exemptions.

(a) Exceptions. Where land has an ST designation and the proposed alteration or development area contains ten acres or less in gross area, and where no transfer of development rights are involved, the community development director may approve site alteration or site development plan. Prior to

such approval, the community development director shall make a finding that the following conditions exist:

(1) The proposed site alteration or site development plan will not require any modification, with the exception of exotic vegetation removal, of the topography, drainage, flora, or fauna on the site.

(2) Single-family principal structure where the proposed site alteration or site development plan will not require any significant modification of topography, drainage, flora, or fauna on the site, or where the alteration involves the renovation or replacement of a single-family structure. Significant modification shall mean greater than ten percent of the site.

(3) No pollutants will be discharged from the area that will degrade the air, water or soil below the levels existing at the time of application.

(b) Exemptions. The following shall be exempt from the requirements of this section:

(1) Removal and control of exotic vegetation.

(Ord. No. 02-24, § 11, 9-3-2002)

Sec. 30-972. - Transfer of development rights.

An owner of land located within areas designated with the ST overlay, may seek to transfer some or all of the residential development rights from one parcel of land to another parcel located in the urban designated area of unincorporated Collier County, as an alternative to the development. The lands to which the development rights are to be transferred shall be referred to as receiving lands and those lands from which development rights are transferred shall be referred to as sending lands. Owners of eligible sending land seeking to transfer development rights shall adhere to provisions contained in the Collier County Land Development Code.

(Ord. No. 02-24, § 12, 9-3-2002)

Sec. 30-973. - Fees.

In order to implement, maintain and enforce this code, the cost upon submission of the environmental impact statement shall be as established by resolution. Until this fee has been paid in full no action of any type shall be taken.

(Ord. No. 02-24, § 13, 9-3-2002)

Sec. 30-974. - Appeals.

(a) Any person aggrieved by the decision of the community development director regarding any section of this code may file a written request for appeal, not later than ten days after said decision, with the city council or their successor organization. The city council will notify the aggrieved person and the community development director of the date, time and place that such appeal shall be heard; such notification will be given 21 days prior to the hearing unless all parties waive this requirement. The appeal will be heard by the city council within 60 days of the submission of the appeal. Ten days prior to the hearing the aggrieved person shall submit to the city council and to the community development director copies of the data and information he intends to use in his appeal.

(b) Upon conclusion of the hearing the facts, findings and recommendations, the city council, in regular session, will make the final decision to affirm, overrule or modify the decision of the community development director.

(Ord. No. 02-24, § 14, 9-3-2002)

Secs. 30-975—30-1000. - Reserved.

ARTICLE XVI. - SUPPLEMENTAL DISTRICT REGULATIONS

Sec. 30-1001. - Visibility at intersections in all zoning districts.

(a) Safe sight distance triangles at intersections and access points. Where an access way intersects a right-of-way or when a property abuts the intersection of two or more rights-of-way, a minimum safe sight distance triangular area shall be established. Within this area, vegetation shall be planted and maintained in a way that provides unobstructed visibility at a level between 18 inches and ten feet above the adjacent access. Parking is prohibited in this area. No fence, wall, or structure shall be erected in this area. (See Figure 1, section 30-438).

(b) Where an access way enters a street, right-of-way, or alley, two safe distance triangles shall be created diagonally across from each other on both sides of the access way. Two sides of the triangle shall extend 15 feet each way from the point of intersection from the edge of pavement and the right-of-way line. The third side of the triangle shall be a line connecting the ends of the other two sides.

(c) Where a property abuts the intersection of two rights-of-way, a safe distance triangle shall be created. Two sides of the triangle shall extend 30 feet along the abutting right-of-way lines, measured from the point of intersection. The third side of the triangle shall be a line connecting the ends of the other two sides.

(Ord. No. 02-33, § 1, 11-4-2002)

Sec. 30-1002. - Accessory buildings and structures.

(a) Accessory buildings and structures must be constructed simultaneously with or following the construction of the principal structure and shall conform to the following setbacks and building separations. In those cases where the coastal construction control line is involved, the coastal construction control line will apply.

Accessory Structure Setbacks
(non-waterfront lots and non-golf course lots)

	Accessory Structure	Front	Rear	Side	Structure to Structure (if detached)
1.	Parking garage or carport (single-family)	SPS	10 feet	SPS	10 feet
2.	One-story parking structures and/or carports (multifamily and commercial)	SPS	35 feet	SPS	10 feet
3.	Multistory parking structures (multifamily and commercial)	SPS	35 feet	SPS	1/1[1]

4.	Swimming pool and/or screen enclosure (one-and two-family)	SPS	10 feet	SPS	N
5.	Swimming pool (multifamily and commercial)	SPS	20 feet	15 Feet	N
6.	Tennis courts, private (one-and two-family)	SPS	15 feet	SPS[3]	10 feet
7.	Tennis courts (multifamily and commercial)	SPS	20 feet	15 feet	20 feet
8.	Utility buildings	SPS	10 feet	SPS	10 feet
9.	Chickee, barbeque areas	SPS	10 feet	SPS	10 feet
10.	Attached screen porch	SPS	SPS	SPS	N/A
11	Unlisted accessory	SPS	SPS	SPS	10 feet

Accessory Structure Setbacks
(Waterfront lots and golf course lots)

	Accessory Structure	Front	Rear	Side	Structure to Structure (if detached)
1.	Parking garage or carport (single-family)	SPS	SPS	SPS	10 feet
2.	One-story parking structures and/or carports (multifamily and commercial)	SPS	SPS	SPS	10 feet
3.	Multistory parking structures (multifamily and commercial)	SPS	SPS	SPS	1/1*
4.	Swimming pool and/or screen enclosure (one-and two-family)	SPS	10 feet[2]	SPS	N

5.	Swimming pool (multifamily and commercial)	SPS	20 feet	15 Feet	N
6.	Tennis courts, private (one-and two-family)	SPS	15 feet	SPS[3]	10 feet
7.	Tennis courts (multifamily and commercial)	SPS	35 feet	15 feet	20 feet
8.	Utility buildings	SPS	SPS	SPS	10 feet
9.	Chickee, barbeque areas	SPS	10 feet	SPS	N
10.	Attached screen porch	SPS	SPS	SPS	N/A
11	Unlisted accessory	SPS	SPS	SPS	10 feet

N = None, N/A = Not applicable, NP = Structure allowed in rear yard only. May be located on pad at ground level, but not mounted on roof, SPS = Calculated same as principal structure.

1 1/foot of accessory height = 1/foot of building separation.

2 Swimming pool decks with an AE flood zone may be constructed to a maximum height not to exceed either the adopted or recommended (best available data) finished floor elevation for the property, with a maximum of four feet of stem wall exposure, with the rear setback of ten feet. Swimming pool decks within a VE flood zone may be constructed to a maximum of seven feet above the seawall with a maximum of four feet of stem wall exposure, with the rear setback of ten feet. Swimming pool decks in either an AE or VE flood zone which exceed the maximum heights permitted herein shall conform to a rear setback of 25 feet.

3 Lighting is prohibited at all tennis court facilities located within single-family residential zoning districts. An opaque landscape hedge shall be planted between a tennis court facility and a side or rear yard property line of different ownership. The landscaping shall be maintained at a minimum of four feet in height and a maximum of six feet in height and shall be provided along the entire length of the tennis court facility.

(b) Limitations as to size of accessory buildings and structures. Accessory buildings shall not occupy an area greater than five percent of the total lot area in all residential zoning districts, or occupy an area greater than 40 percent of any building envelope (i.e., area of lot remaining for building purposes after accounting for required setbacks), whichever is the lesser, provided the total maximum coverage provision of this article for all principal and accessory buildings is not exceeded. Nothing herein contained shall serve to prevent the construction of an accessory building containing an area of less than 500 square feet provided all yard and building spacing requirements can be met.

(Ord. No. 02-33, § 2, 11-4-2002; Ord. No. 04-09, § 1, 6-21-2004)

Sec. 30-1003. - Exclusions from height limits.

The height limitations do not apply to spires, belfries, cupolas, water tanks, fire towers when operated by a branch of government, ventilators, chimneys, or other appurtenances usually required to be placed above the roof level. Human occupancy, even casual use, is prohibited except for routine maintenance.

(Ord. No. 02-33, § 3, 11-4-2002)

Sec. 30-1004. - Exceptions to required yards.

(a) Yard encroachments. Every part of every required yard shall be open and unobstructed from 30 inches above the general ground level of the graded lot upward except as listed below. Such exceptions, when utilized in yards where recorded easements exist, are allowed with the explicit understanding that any structural improvement(s) or vegetation located within a recorded easement are subject to removal, at the owner's sole expense, when authorized entities must enter upon such easement area to repair, improve, reconstruct or make such lawful improvements as deemed necessary.

(1) Sills and other architectural and design treatments shall not project over 12 inches into a required yard.

(2) Moveable awnings shall not project over three feet into a required yard.

(3) Window-mounted air-conditioning units, chimneys, fireplaces, bay windows, or pilasters shall not project over two feet into a required yard.

(4) Wall-mounted, cube mounted, or cantilevered air-conditioning units shall not project over two feet into a required side yard or four feet into the rear yard. Units permitted prior to January 1, 2002 shall not project over four feet into a required side or rear yard.

(5) Fire escapes, stairways, and balconies which are unroofed and unenclosed shall not project over five feet into a required side or rear yard of a multiple-family dwelling, hotel or motel.

(6) Fire escapes and balconies that are unroofed and unenclosed shall not project over three feet into a required side or rear yard of a single-family residential dwelling. Staircases shall not project over four feet into any required yard of a single-family residential dwelling.

(7) Hoods, canopies, or roof overhangs shall not project over three feet into a required yard.

(8) Fences, walls, privacy walls, vegetative materials, hedges, pool equipment and pad-mounted air conditioners are permitted in required yards, subject to the conditions contained herein.

(9) Cornices, eaves or gutters shall not project over three feet into a required yard.

(10) Satellite dishes having a diameter of 18 inches or less which are attached to the principle structure shall not project over three feet into a required side or rear yard.

(b) Minor improvements to legal nonconforming structures located within a residential zoning district. Where a structure was lawfully permitted within a residential zoning district under a previous code, and where said structure is considered nonconforming under the current land development code due to changes in the required side or rear yards, the community development director may administratively approve a variance for an amount equal to or less then the existing side and/or rear yard encroachment. Canopies, windowsills or other projections as provided for shall not be used in the calculation of existing side and/or rear yard encroachments.

The applicant shall follow the procedures as provided below and in addition the applicant shall submit a detailed conceptual site plan drawn to scale depicting all existing structures and the proposed addition, as well as the distance between the property lines and the existing and proposed structures. Additionally, the applicant shall provide proof that the encroaching structure was legally constructed. Such

proof shall include, at a minimum, evidence that a building permit was issued for the encroaching structure, or, where such evidence cannot be provided, documentation from the property appraiser's office of the date the structure was placed on the tax rolls.

(c) Waterfront yards. It is the intent and purpose of this section to permit the placement of principal structures, except single-family, two-family and duplex dwelling units, at the bulkhead line or shoreline where such placement at the water's edge can enhance the character of waterfront development without detriment to adjoining or nearby properties or without damage to a particular environmental situation. The provisions of this section have their greatest potential application in planning for the use of tidewater inlands or areas of the city of such size and location that the use of this provision will meet its intent and purpose. If the provisions of this section are met, such provisions govern regardless of any requirement for waterfront yards in the zoning district involved. In those cases where the coastal control line is involved, the coastal construction line shall apply.

(d) Classification of waterfront lands and building location. Principal structures shall not be erected waterward under this code beyond the following limits for the situations outlined:

(1) For waterfront lands along which a bulkhead line has been established, buildings may be erected out to, but not beyond, the bulkhead line.

(2) For waterfront lands along which an offshore building limit has been established by the city, buildings may be erected out to, but not beyond, the building limit line.

(3) For waterfront lands along which neither a bulkhead nor a building limit line has been established, buildings may be erected out to, but not beyond, the shoreline, as that shoreline exists prior to development and construction.

(4) Undeveloped and redeveloping waterfront property shall provide an eight-foot wide pedestrian walkway adjacent to and parallel with the existing seawall and/or waterfront. The walkway shall be provided either along the landward side of the seawall in the form of a hardscape walkway, or along the waterway side of the seawall in the form of a parallel dock. These walkways shall comply with guidelines pursuant to article VIII.

(e) Uses. Since this section applies only to the placement of structures in waterfront yards, there shall be no use permitted under this section which is not permitted or permissible in the district involved.

(f) Site development plan required. An applicant under this section shall submit a site development plan. In addition the applicant shall submit such materials as will demonstrate that the placement of the proposed buildings in waterfront yards from which they would otherwise be excluded: (1) will not adversely affect adjoining or nearby properties; and (2) will cause no adverse environmental effects of building placement as requested.

(Ord. No. 02-33, § 4, 11-4-2002)

Sec. 30-1005. - Buildings to have access.

Every building hereafter erected or moved shall be on a lot adjacent to a public street or with actual and legal access to an approved private street or vehicular access easement, and all structures shall be so located on lots as to provide safe and convenient access for servicing, fire protection, and required off-street parking.

(Ord. No. 02-33, § 5, 11-4-2002)

Sec. 30-1006. - Use of residentially zoned property for access prohibited.

No lot or parcel which is residentially zoned or designated shall be used for driveway, walkway or access purposes to any land which is non-residentially zoned or designated, or used for any purpose not permitted in a residential district.

(Ord. No. 02-33, § 6, 11-4-2002)

Sec. 30-1007. - Parking and storage of certain vehicles.

(a) Parking and storage of vehicles without current license plates. Vehicles or trailers of any type that are not immediately operable, or used for the purpose for which they were manufactured without mechanical or electrical repairs or the replacement of parts; or do not meet the Florida Safety Code; or do not have current valid license plates; or do not meet the definition of recreational equipment as defined within this Code, shall not be parked or stored in any zoning district, other than in a completely enclosed building, with the following exceptions:

(1) While temporarily stored on the property of a licensed automotive repair or body shop facility for the purpose of having repair completed on the vehicle;

(2) While stored in an authorized impound lot or at city police or fire facilities; or

(3) While stored in a C-5 zoned area which is shielded from all rights-of-way by opaque fencing, walls, or vegetation at least six feet in height.

(b) Parking, storage or use of major recreational equipment. The parking of recreational vehicles is prohibited except as follows:

(1) When vehicle is parked within the confines of a fully enclosed structure such that it cannot be seen from any abutting property or public right-of-way.

(2) When parked in the open on the driveway of the property for a period of time not to exceed 24 hours to allow for loading and unloading.

(3) Upon receipt of a permit from the code enforcement division provided that:

a. Parking shall not exceed seven days for the purpose of loading, unloading, minor repairs, and cleaning prior to or after a trip.

b. The permit shall be affixed to the vehicle in a conspicuous place.

c. Prior to the expiration of the seven-day permit, a second seven-day permit may be issued upon a finding by the code enforcement division that the permittee has complied with permit conditions.

d. A maximum of four permits, or 28 total days, may be granted in any single calendar year.

e. In no event shall recreational vehicles be used for living or sleeping purposes.

(c) Boat and boat trailer parking.

(1) The parking of a boat and boat trailers in residentially zoned districts is prohibited except as follows:

a. When boat or boat trailer is parked within the confines of a fully enclosed structure such that it cannot be seen from any abutting property, public way, or waterway.

b. On a temporary basis, not to exceed eight hours, for the purpose of loading, unloading, and cleaning.

c. When moored, berthed, or stored on an approved boat docking facility.

(2) The display of a boat for sale is prohibited except as follows:

a. After the issuance of a permit, which is limited to one permit per calendar year, per property.

b. The permit shall be for a maximum of 60 days.

c. The boat offered for sale is moored, berthed, or stored on an approved boat docking facility.

d. One "for sale" sign shall be allowed, not to exceed 1½ square feet in size, affixed to the boat.

e. A permit shall only be issued to the title-holder.

(d) Parking of commercial vehicles or commercial equipment in residential areas. It shall be unlawful to park a commercial vehicle or commercial equipment on any lot in a residential zoning district unless one of the following conditions exists:

(1) The vehicle and/or equipment is engaged in a construction or service operation on the site where it is parked. The vehicle or equipment must be removed as soon as the construction or service activity has been completed.

(2) The vehicle and/or equipment is parked in a garage or fully enclosed structure or carport which is structurally or vegetatively screened and cannot be seen from adjacent properties or the street serving the lot.

(3) The vehicle is parked in the rear of the main structure and is enclosed within a vegetative screening which conceals the vehicle from the view of neighbors.

(4) Automobiles; passenger type vans; and pickup trucks having a rated load capacity of one ton or less, all of which do not exceed 7½ feet in height, nor seven feet in width, nor 25 feet in length shall be exempted from this section unless otherwise prohibited by a special parking overlay district.

(5) Exempted from this section is small commercial equipment such as ladders and pipes which cannot be contained in the vehicle. Said equipment shall be limited to one ladder or one unit of pipe which does not exceed 12 inches in diameter per commercial vehicle. Said equipment shall be secured atop the vehicle and shall not extend beyond the length, height or width of the vehicle.

(6) Parking of commercial vehicles or commercial equipment on vacant residential lots is prohibited.

(Ord. No. 02-33, § 7, 11-4-2002; Ord. No. 10-09, § 2.4., 8-16-2010)

Sec. 30-1008. - Essential services.

(a) Definitions; conditions. Essential services are hereby defined as services designed and operated to provide water, sewer, gas, telephone, electricity, cable television or communications to the general public by providers which have been approved and authorized according to laws having appropriate jurisdiction, and governmental facilities. Essential services are allowed in any zoning district subject to the following conditions:

(1) Permitted uses. The following uses shall be deemed permitted uses in any zoning district: water lines, sewer lines, gas lines, telephone lines, telephone switching stations, cable television, electrical transmission and distribution lines substations, emergency power structures, sewage lift stations, water pumping stations, individual private wells and septic tanks, and similar installations necessary for the performance of these services. Governmental facilities, as defined by this code, shall be permitted uses in commercial zoning districts. Furthermore, the following governmental facilities shall be permitted uses in residential zoning districts: nonresidential not-for-profit childcare, nonresidential education facilities, libraries, museums, parks and recreational service facilities.

(2) Conditional uses. The following uses shall be deemed conditional uses in any zoning district: electric or gas generating plants, effluent tanks, major re-pump stations, sewage treatment plants including percolation ponds, hospitals, hospices, water aeration or treatment plants, governmental facilities in residential, and agricultural zoning districts except as otherwise

specified by subsection (1), public water supply acquisition, withdrawal, or extraction facilities, safety service facilities, and other similar facilities.

(b) Applicability of district regulations. Under this subsection, where structures are involved other than structure supporting lines or cables, such structures shall comply with the regulations for the district in which they are located or as may be required on an approved site development plan per article IX. In addition, the structures shall conform insofar as possible to the character of the district in which they are located as to development standards as well as architecture and landscaping, with utilization of screening and buffering compatible with the district.

(c) Structure for commercial activities. Essential services shall not be deemed to include the erection of structures for commercial activities such as sales or the collection of bills in districts from which such activities would otherwise be barred. Unstaffed billing services, which are accessory uses to the normal operations of the essential service, may be permitted.

(Ord. No. 02-33, § 8, 11-4-2002)

Sec. 30-1009. - Fences.

(a) Fences in zoning districts. Fences or walls shall be allowed in all zoning districts subject to the restrictions set forth below:

(b) Residential districts. For the purposes of this section, residential districts shall include: RSF residential single-family; RMF-6, RMF-12, and RMF-16 residential multiple-family; RT residential tourist; and residential increments of PUD residential planned unit development districts. Fences and walls shall be subject to the following:

(1) Fences or privacy walls placed within required yards shall be limited to six feet in height except that no fence placed between the front building line and the front property line of lots or parcels less than 1.25 acres in size shall be greater than four feet in height.

(2) Fences or walls placed within the required rear yard of waterfront lots one acre or less in size shall be limited to four feet in height.

(3) Corner lots shall maintain sight distance triangle areas. Fences and walls are prohibited within these areas.

(4) Up to four six-foot entry posts may be incorporated as part of an approved fence in the front yard(s).

(5) Fences and walls shall be constructed of conventional building materials such as, but not limited to concrete block, brick, wood, decorative iron or steel.

(6) Coated chain-link fencing shall only be allowed in side yards and in rear yards. Coated chain-link fencing and/or chain link fencing is prohibited in front yards. Refer to article VIII for chain link fence criteria within commercial zoning districts.

(7) Fences and walls shall be constructed to present the finished side of the fence or wall to the adjoining lot or any abutting right-of-way.

(8) Barbed wire, razor wire, spire tips, sharp objects, or electrically charged fences shall be prohibited, except that the board of zoning appeals may allow the use of barbed wire in conjunction with chainlink fencing where it finds a security or hazard exists such as a utility substation, sewage treatment plant, or similar use.

(c) Agricultural districts. For the purpose of this section, agricultural districts shall include: A agricultural and CON conservation districts. Fences and walls within agricultural districts shall be subject to the same fencing provisions as for residential districts.

(d) Commercial districts. For the purpose of this section, commercial districts shall include: C-1/T, C-2, C-3, C-4, C-5, P public use district; and commercial parcels of PUD planned unit developments.

Fences or walls shall be allowed subject to the following. Fences or walls in commercial districts shall be limited to eight feet in height and shall be permitted subject to the following conditions:

(1) All fencing located in a front yard shall not be located within the required landscape buffer. All fencing located adjacent to an alley right-of-way may encroach five feet into the required landscape buffer.

(2) Fencing located adjacent to a right-of-way shall provide all code required landscaping along the side facing the right-of-way (50 percent if located along alley right-of-way).

(3) Chain link fencing is prohibited in all commercial zoning districts except within the Elkcam Circle zoning overlay as specified in article VIII.

(4) Split rail fencing shall be allowed within a landscape buffer as an embellishment.

(5) Razor wire, spire tips, sharp objects or electrically charged fences shall be prohibited.

(e) Fencing generally.

(1) All fences and walls shall be of sound construction and shall not detract from the public health, safety and welfare of the general public.

(2) All fences and walls shall be maintained in a manner that will not detract form the neighborhood or community.

(3) No fence or wall within any district shall block the view of passing motorists or pedestrians so as to constitute a hazard.

(4) Fences and walls shall be constructed of conventional building materials such as, but not limited to concrete block, brick, wood, decorative iron or steel, and chain link. Coated chain link and chain link fencing is prohibited in the front yards of residential zoning districts, and all commercial zoning districts except as specified above.

(5) Fences and walls shall be constructed to present the finished side of the fence or wall to the adjoining lot or any abutting right-of-way. Where due to the presence of an existing fence or wall or continuous landscape hedge on the adjoining parcel, this provision may be administratively waived where said request has been requested in writing.

(6) When determined to be beneficial to the health, safety, and welfare of the public, the community development director may waive height limitations of fences and walls in all districts.

(7) Existing ground levels shall not be altered for the purpose of increasing the height of a proposed wall or fence.

(f) Fence height measurement for all districts. The height of a fence or wall located outside of the building line shall be measure from the ground level at the fence location. However, if the community development director determines that ground levels have been altered so as to provide for a higher fence, the community development director shall determine the ground level for the purposes of measuring the fence height. In determining whether the ground level has been altered for the purposes of increasing the height of the fence, the community development director may consider, but is not limited to consideration of, the following facts:

(1) General ground elevation of the entire lot.

(2) In case of a lot with varying ground elevations, the average elevation over the length of the fence, and at points in the vicinity of the fence.

(3) The ground elevation on both sides of the fence. In measuring the fence height, the ground elevation on the side of the fence location that is at the lowest elevation shall be used as a point from which the fence height is to be measured.

(4) Fences or walls shall be permitted principal uses; however a fence or wall shall not, in any way, constitute a use or structure, which permits, requires and/or provides for any accessory uses and/or structures.

(Ord. No. 02-33, § 9, 11-4-2002)

Sec. 30-1010. - Miscellaneous structures.

School bus shelters, bicycle racks, bus stop benches, and mailboxes, shall be permitted in any zoning district. Brochure racks, delivery boxes, newspaper boxes/racks for public sale and distribution shall be permitted in all zoning districts other than residential single-family dwelling (RSF) districts. No advertising sign shall be permitted on any such structure. All such structures are exempt from district setbacks, however, each shall comply with regulations pursuant to sight distance triangles. Brochure racks, delivery boxes, and newspaper boxes/racks shall be removed from zoning districts prohibiting such uses within one year of adoption of the ordinance from which this article derives. Zoning districts permitting brochure racks, delivery boxes, and newspaper boxes/racks shall comply with the architectural and site design guidelines provided for in article VIII, within two years of adoption of the ordinance.

(Ord. No. 02-33, § 10, 11-4-2002; Ord. No. 10-08, § 2.6., 8-16-2010)

Sec. 30-1011. - Guesthouse.

No guest accommodation facility in a single-family residential district, whether a freestanding guesthouse or guest accommodations which are structurally integrated with the main dwelling, may be utilized for commercial purposes. Leasing or renting a guest accommodation facility shall constitute a violation of this zoning code. Similarly, if main residence is leased or rented, a guest accommodation facility accessory to it may not be occupied by the property owner, since that would constitute the unlawful utilization of single-family zoned property for two-family dwelling purposes. Guesthouses shall not be constructed on lots which are smaller than 43,560 square feet in area, nor shall the living area of a guesthouse be larger than 40 percent of the air conditioned, enclosed living area (excluding garages, carports, patios, porches, utility areas, and the like) of the principal dwelling. Detached guesthouses shall not be closer than 20 feet to the principal dwelling. A guesthouse may be constructed prior to a principal dwelling, provided the guesthouse meets the minimum requirements of a single-family residence in the district in which it is being constructed. At such time as a principal residence is constructed, then the floor area percentages listed above shall apply.

(Ord. No. 02-33, § 11, 11-4-2002)

Sec. 30-1012. - Solid waste disposal.

(a) Form required. Pursuant to Collier County Ordinance No. 90-30, as amended, solid waste disposal shall be required in the form of bulk container service (garbage dumpsters) for all commercial, institutional, residential tourist, and multifamily developments.

(b) Screening. All trash or recycle receptacles shall be located so as to be easily accessible to the residents and the solid waste hauler, and shall be 100 percent screened on all sides by opaque materials to prevent visibility of containers by neighboring property owners and from adjacent streets at the first floor level. Screening materials shall be consistent with design treatments of primary building facades, landscape plan, and in accordance with article VIII. The following materials and structures may be used for screening as required above:

    (1) Wood, plastic, or fences of similar materials.

    (2) Concrete block and stucco wall, brick wall, masonry wall, or walls of similar material.

    (3) Vegetative screening in conjunction with a. and b. above.

Screening, as required above, shall be maintained and/or installed at a minimum of six feet in height and a maximum of eight feet in height provided there is no obstruction of vision of adjacent streets, right-of-way or sight distance triangles. Opaque gates shall be installed on the front of the dumpster enclosure.

(c) Minimum requirements and locational restrictions. In the case of multifamily developments, at least one standard size bulk container (dumpster) per every ten dwelling units shall be required. All such containers are subject to the following locational restrictions:

(1) Solid waste bulk containers may be located within a required yard provided they do not encroach into a required landscape area, and further provided that there be no blockage of the view of motorists or pedestrians so as to constitute a hazard.

(2) In the case of multifamily developments containing more than one structure, no solid waste bulk container (garbage dumpster) shall be located greater than 200 feet from the structure it is intended to serve.

(d) Exceptions. The community development director, or his designee, may allow the following exceptions to the above requirements. Solid waste bulk containers (dumpsters) may be substituted by individual solid waste disposal service (unit by unit curbside pick-up) subject to the following:

(1) In the case of individually owned multifamily dwelling units (condominiums), individual (curbside) solid waste disposal service may be substituted for the required bulk containers (dumpsters) upon documentation that the subject unit or condominium association, having been turned over from the developer to the residents, has voted in the majority to eliminate the use of dumpsters in favor of individual curbside service for all or part of a particular development, subject to acceptance from both the community development director and the waste hauler. Additionally, the association shall demonstrate that there is adequate access to facilitate curbside pickup and that all individual units have an enclosed location other than the residential structure, such as a carport or garage, for the storage of individual solid waste containers.

(Ord. No. 02-33, § 12, 11-4-2002)

Sec. 30-1013. - Integral caretaker's residence in commercial districts.

The community development director may authorize the construction of a caretaker's residence in the C-1/T, C-2, C-3, C-4 commercial districts and C-5 heavy commercial district; subject to the following:

(1) The residence shall be constructed as an integral part of the principal structure and shall be entered from within the principal structure. Exits required to comply with fire code shall be permitted.

(2) The caretaker's residence shall be an accessory use and shall be for the exclusive use of the property owner, tenant, or designated employee operating maintaining the principal structure.

(3) Off-street parking shall be provided as for a single-family residence.

(4) Any other requirement which the community development director determines necessary and appropriate to mitigate adverse impacts of such use in the district.

(Ord. No. 02-33, § 13, 11-4-2002)

Sec. 30-1014. - Condominiums.

This zoning code shall be construed and applied with reverence to the nature of the use of such property without regard to the form of ownership. Condominium forms of ownership shall be subject to this code as is any other form of ownership. Condominiums of any kind, type or use shall comply with the provisions of F.S. ch. 718, as amended, known as the "Condominium Act."

(Ord. No. 02-33, § 14, 11-4-2002)

Sec. 30-1015. - Deed restrictions.

Significant portions of Marco Island are subject to recorded deed restrictions. As the city is not responsible for enforcement of private deed restrictions, it is incumbent upon individuals to know what private restrictions may apply to their property.

(Ord. No. 02-33, § 15, 11-4-2002)

Sec. 30-1016. - Relationship to state and federal statutes.

(a) Required state and/or federal permits. Where proposed use or development required state or federal development orders or permits prior to use or development, such development orders or permits must be secured from state or federal agencies prior to commencement of any construction and/or development, including any changes inland configuration and land preparation.

(b) Development of regional impact. Where a proposed use or development is a development of regional impact (DRI), it shall meet all of the requirements of F.S. ch. 380, as amended, prior to the issuance of any required city development orders or permits and commencement of construction or development. Submission of the application for development approval (ADA) for a DRI shall be simultaneous with the submission of any rezoning and/or conditional use application or other land use related petition required by this code to allow for concurrent reviews and public hearings before both the planning board and city council of the ADA and rezone and/or conditional use applications. The DRI and rezone and/or conditional use shall be approved prior to the issuance of any required city development orders or permits and commencement of construction or development.

(Ord. No. 02-33, § 16, 11-4-2002)

Sec. 30-1017. - Prohibited animals in residential districts.

The following animals are to be considered farm animals and are not permitted to be kept in residential districts except as provided for in zoning district regulations: turkeys, chickens, ducks, geese, pigs, horses, cows, goats, hogs, and the like.

(Ord. No. 02-33, § 17, 11-4-2002)

Sec. 30-1018. - Group housing development standards.

(a) General requirements. All group house structures shall meet the following requirements specified for each type of structure:

    (1) Site development plan (SDP) approval in conformance with the land development code (with the exception of a family care facility).

    (2) All applicable state and county building and fire code standards.

    (3) All applicable state and county licensing requirements.

(b) Family care facility. A family care facility shall be treated as a single dwelling unit for the purpose of determining applicable development standards and, therefore, shall conform to the standards identified for a single-family dwelling unit in the zoning district assigned to the property, as well as other applicable standards found in the zoning code. However, a new family care facility shall not be located within a radius of 1,000 feet of another existing family care facility.

(c) Group care facility (category I and category II). A group care facility shall be governed by the development standards identified in the zoning district assigned to the property and the following standards:

(1) Minimum habitable floor area.

a. Group care facility (category I): 1,500 square feet plus 200 square feet per live-in person, beginning with the seventh live-in person.

b. Group care facility (category II):

1. Homeless shelters: 1,500 square feet plus 150 square feet per live-in person, beginning with the seventh live-in person.

2. Uses other than the homeless shelters: 1,500 square feet plus 200 square feet per live-in person, beginning with the seventh live-in person.

(d) Minimum lot area.

(1) Group care facility (category I): 6,000 square feet plus 1,500 square feet per live-in person, beginning with the seventh live-in person.

(2) Group care facility (category II):

a. Homeless shelters: 6,000 square feet plus 400 square feet per live-in person, beginning with the seventh live-in person.

b. Uses other than homeless shelters: 6,000 square feet plus 1,500 square feet per live-in person, beginning with the seventh live-in person.

(e) Parking required. Two parking spaces per five beds (minimum requirement: two parking spaces).

(f) Separation requirements.

(1) A new group care facility shall be required to be located greater than a radius of 1,200 feet from any other existing group care facility (applicable to the RMF-6, RMF-12, RMF-16, and RT zoning districts).

(2) A new group care facility shall be required to be located greater than a radius of 500 feet from any other existing group care facility (applicable to the RSF-2, RSF-3, and RSF-4 zoning districts).

(3) Distance requirements shall be measured along a straight line from the nearest point of the existing group care facility property to the nearest point of the proposed new group care facility property.

(g) Special setback requirements. No structure shall be erected within 20 feet of any abutting lot or parcel that is zoned residential, nor within 25 feet of a road right-of-way.

(h) Landscaping requirements. As provided for in article IV.

(i) Other care housing facilities. All other care housing environments as defined in this code, including but not limited to care units, assisted living units, continuing care retirement communities, nursing homes, and dwelling units that are part of an aging-in-pace living environment shall adhere to the following standards in addition to those established by the underlying zoning district.

(j) Maximum floor area ratio. Reserved.

(k) Additional submittal requirements. In addition to the required SDP or conditional use submittal requirements of this code, developments containing independent housing units providing an assisted living and nursing care component must be graphically represented as part of the conditional use and/or site development plan application. This graphic representation shall depict all common areas as well as a typical independent housing unit and shall include dimensions and square footage of each component. Additionally, ratio of independent units to assisted units, and the number of skilled nursing beds shall be indicated. The application shall include a statement of available assistance

with "activities of daily living," including but not limited to ambulation, grooming, feeding, financial management, medicine management, and so on.

(l) Maximum height. The maximum height shall be the same as the underlying zoning district except as otherwise modified through the conditional use process for residentially zoned districts.

(m) Special setback requirements. No structure shall be erected within 20 feet of any abutting lot or parcel which is zoned residential, nor within 25 feet of a road right-of-way.

(n) Parking required.

(1) Independent living units. One per dwelling unit.

(2) Assisted living units. 0.75 per assisted unit.

(3) Nursing care units. Two parking spaces per five beds.

(o) Maximum density. The maximum density of the development shall not exceed the underlying zoning district residential density, the applicable future land use element residential density allocation, or 26 units per acre, whichever is most restrictive.

(Ord. No. 02-33, § 18, 11-4-2002; Ord. No. 03-02, §§ 1, 2, 2-18-2003)

Sec. 30-1019. - Automobile service stations.

(a) The following regulations apply to the location, layout, drainage, operation, fencing, landscaping, parking and permitted sales and service activities of automobile service stations:

(1) Lot size. Minimum 18,000 square feet.

(b) Minimum frontage. An automobile service station shall not be located on a lot with less than 150 feet of frontage on a dedicated street or highway.

(1) Minimum depth. One hundred twenty feet.

(2) Minimum yards.

a. Front yard setback. Fifty feet.

b. Side yard setback. Forty feet.

c. Rear yard setback. Forty feet.

(3) Canopy. Ten feet beyond pump setback line.

(4) Storage tanks. Storage tanks shall be located below grade.

(5) Lighting. As provided for in chapter 6, article V.

(6) Location of structures, pumps, etc. No main or accessory building, no sign of any type, and no gasoline pump, tank, vent, pump island or pump island canopy shall be located within 25 feet of any residentially zoned property. Gasoline pumps and pump islands shall be located not closer than 30 feet to the street property lines and shall be located no closer than 40 feet to any side or rear property line. Pump island canopies shall be located not closer than 20 feet to the street property line. If such setback requirements mentioned above are closer than setback requirements for the zoning district in which the automobile service station is located, such service station appurtenances shall be removed before the property is converted to a use other than an automobile service station. Removal of fuel storage tanks is required. Freestanding vents are not permitted.

(7) Entrance and exit. No automobile service station shall have an entrance or exit for vehicles within 200 feet along the same side of a street of a school, public playground, child care center, church, hospital, public library, or any institution for dependents or for children, except where such property is in another block.

(8) Fence requirements. If an automobile service station abuts a residential district, a wall of solid decorative material five feet in height or a wall of landscaping must be provided and properly maintained. If the station is separated from the residential zone by an alley, then the wall shall be erected along the lot line also. In addition, all outside trash areas for used tires, auto parts, and other items shall be enclosed on all sides by a five-foot-high decorative fence or wall which shall conform to all fence setback regulations. All walls and buildings shall be protected by a barrier to prevent vehicles from contacting the wall.

(9) Outside display of products. Petroleum products in cans and windshield wiper blades may be displayed outside the service station building in the standard racks provided for such display, provided such racks shall not be placed closer to a street line than the pump island. There shall be no outside display or stacking of tires or other merchandise.

(10) Trash facilities. Adequate, completely enclosed trash storage facilities shall be provided on the site. On an interior lot, such facilities shall be located at the rear of the service station's main structure; on a corner lot, such facilities shall be located, where possible, on the side of the main structure with street frontage carrying the lesser volume of traffic.

(11) Vehicle sales. There shall be no vehicle sales conducted on the premises.

(12) Drainage. The entire lot, excluding the area occupied by a building, shall be properly drained and hard-surfaced with concrete or plant-mixed bituminous material, except for the required landscaped areas.

(13) Parking areas. As required in article V.

(14) Landscaping. As required in article IV.

(15) General uses and services. In addition to the retail dispensing of automobile fuels and oil, only the following services may be rendered and sales made except as indicated:

a. Sales and servicing of spark plugs, batteries, distributors and distributor parts.

b. Sales, mounting, balancing and repair of tires and wheel alignments, but not recapping of tires.

c. Sales and replacement of water hoses, fan belts, brake fluid, light bulbs, fuses, floor mats, wiper blades, grease retainers, wheel bearings, shock absorbers, mirrors, exhaust systems, and the like.

d. Provision of water, antifreeze, flushing of the cooling system, air conditioning recharge, and the like.

e. Washing and polishing of automobiles and sale of automobile washing and polishing materials, but this only allows auto detailing as an accessory use, but this provision does not allow carwashes except in those zoning districts where carwash is a permitted use; and such carwashes shall be subject to criteria specified in the zoning district.

f. Providing and repairing fuel pumps and lines.

g. Minor servicing and repair of carburetor and fuel injection systems.

h. Emergency wiring repairs.

i. Providing repair and replacement of brake rotors, drums and pads.

j. Minor motor adjustments not involving removal of the head or crankcase.

k. Greasing and lubrication.

l. Sales of cold drinks, candies, tobacco, and similar convenience goods for service station customers, but strictly and only as accessory and incidental to the principal business operation.

m. Provision of road maps and other information outside of the enclosed areas.

n. No mechanical work shall be allowed outside of the enclosed areas.

n. No automobile service station shall be permitted where any oil drainage pit or visible appliance for any such purpose other than refueling cars is located within 20 feet of any street right-of-way or within 45 feet of any residential district, except where such appliance or pit is located within a wholly enclosed building.

o. Uses permissible at an automobile service station do not include major mechanical and body work, straightening of frames or body parts, steam cleaning, painting, welding, storage of automobiles (except as expressly permitted in subsection p. below), commercial garage as an accessory use, or other work involving undue noise, glare, fumes, smoke or other characteristics to an extent greater than normally found in such stations. An automobile service station is not a facility for the sale of automobile vehicles, a repair garage, a body shop, or a truckstop.

p. The temporary storage of vehicles shall be permitted if the vehicles are to be serviced at the service station or if the vehicles have been towed by the service station and are being held for servicing, for an insurance company, or for sale or salvage. Any such vehicle(s), other than those vehicles serviced daily, shall be stored within an area surrounded by an opaque fence not less than six feet high. Said vehicles shall not be stored longer than 90 days.

q. Convenience grocery stores selling motor fuel must conform with all provisions of this code.

(Ord. No. 02-33, § 19, 11-4-2002)

Sec. 30-1020. - Open space requirements in all zoning districts.

(a) Usable open space requirements. Usable open space shall include active and passive recreation areas such as playgrounds, golf courses, beach frontage, waterways, lagoons, floodplains, nature trails, and other similar open spaces. Open space areas shall also include those areas set aside for preservation of native vegetation and landscaped areas. Open water area beyond the perimeter of the site, street rights-of-way, driveways, off-street parking areas, and off-street loading areas shall not be counted in determining usable open space. Open space requirements for planned unit developments (PUDs) are stated in the PUD zoning district standards.

(b) Residential developments. In residential developments, at least 60 percent of the gross area shall be devoted to usable open space. This requirement shall not apply to individual single-family lots less then five acres in size.

(c) Commercial and mixed use developments. In developments of commercial or mixed use including residential, at least 30 percent of the gross area shall be devoted to usable open space. This requirement shall not apply to individual parcels less than five acres in size.

(Ord. No. 02-33, § 20, 11-4-2002)

Sec. 30-1021. - Townhouse development.

Townhouse development as defined in this code when authorized in the RMF and RT zoning districts either as a permitted or conditionally permitted use shall be designed to meet the development standards of such zoning district.

(Ord. No. 02-33, § 21, 11-4-2002)

Sec. 30-1022. - Kitchens in dwelling units.

A dwelling unit may have a second kitchen provided all rooms in the dwelling unit are, and remain internally accessible.

(Ord. No. 02-33, § 22, 11-4-2002)

Sec. 30-1023. - Floor area requirements for timeshares, multifamily structures, hotels and motels.

(a) Timeshare facilities: 500 square foot minimum with a 1,500-square-foot maximum except that 20 percent of the units may be utilized for suites greater than 1,500 square feet.

(b) Multifamily structures: Efficiency, minimum 450 square feet; one bedroom, minimum 600 square feet; two bedrooms or more, minimum 750 square feet.

(c) Hotels and motels: 300 square foot minimum with a 1,000-square-foot maximum except that 20 percent of the units may be utilized for suites greater than 1,000 square feet.

(Ord. No. 02-33, § 23, 11-4-2002)

Sec. 30-1024. - Flagpoles.

Flagpoles are permitted in all zoning districts subject to the following:

(1) Residential and agricultural zoning districts:

a. One flagpole is permitted and shall not exceed 25 feet in height above finished grade.

b. A flagpole over 15 feet in height shall require a building permit prior to installation.

c. Up to three noncommercial flags may be flown from an approved flagpole.

d. Flagpoles shall be setback a minimum of 7½ feet from a property boundary, zero feet from seawalls, and five feet from a principal and/or accessory structure.

e. The width of the flag shall not exceed 20 percent of the length of the pole to which it is attached.

(2) Commercial, golf course and residential tourist zoning districts:

a. Three flagpoles are permitted and shall not exceed 35 feet in height above finished grade.

b. A flagpole over 15 feet in height shall require a building permit prior to installation.

c. Up to three noncommercial flags may be flown from an approved flagpole.

d. Flagpoles shall be setback a minimum of 7½ feet from a property boundary, zero feet from seawalls, and five feet from a principal and/or accessory structure.

e. The width of the flag shall not exceed 30 percent of the length of the pole to which it is attached.

(3) Ordinance Nos. 98-13 and 02-11 shall apply to the above-referenced zoning districts.

(Ord. No. 02-33, § 24, 11-4-2002)

Sec. 30-1025. - Access management plans. (Reserved.)

(Ord. No. 02-33, § 25, 11-4-2002)

Sec. 30-1026. - Standards for parking within the Marco Lake Drive business district (MLDBD).

(a) Continuation of Marco Lake Drive business district. The Marco Lake Drive business district, created by Collier County ordinance 95-31, is hereby continued. The physical limits of the Marco Lake Drive business district (MLDBD) remain as depicted on the official zoning atlas map of the subject area. All of the lots which constitute the MLDBD are zoned commercial and have frontage on Marco Lake Drive. The MLDBD Highlands Subdivision, as recorded in Plat Book 3, Page 72, of the public records of Collier County, Florida.

(b) Existing uses. Uses in existence as of the date of district creation (April 18, 1995), are exempt from the minimum parking requirements as set forth in article V subject to the following conditions:

(1) Existing uses shall not reduce the number of spaces below that which is provided as of the effective date of this amendment.

(2) The strip of parking located along the eastern edge of Marco Lake Drive is designated public parking, no storage of commercial vehicles or overnight parking shall be permitted thereon.

(c) Expansion or new development. Parking to support any new development within the boundaries of the MLDBD shall be provided at 75 percent of the minimum requirement as set forth in article V for uses which have a parking intensity of one space per 200 square feet or less, for the square footage of the expansion or new construction only. Any expansion or new construction for uses having a parking intensity greater than one space per 200 square feet shall provide the minimum parking required as set forth in article V. Any expansion or new construction shall include the on-site installation of parking for the disabled as provided in article V.

(d) Change in existing use. A change in any use shall be exempt from the minimum parking requirements as set forth in article V up to an intensity level of one parking space per 200 square feet. A change of use to an intensity of greater than one space per 200 square feet shall provide parking for the use as set forth in article V, and shall provide on-site parking for the disabled as set forth therein.

(e) Off-site parking agreements. In no way shall the provisions of the Marco Lake Drive business district (MLDBD) be constructed so to prevent establishments within the boundaries from taking advantage of off-site parking arrangements as set forth in article V.

(Ord. No. 02-33, § 26, 11-4-2002)